SOIL DATA COLLECTION USING WIRELESS SENSOR NETWORKS AND OFFSITE VISUALIZATION: CASE STUDY OF THE INNOVATIVE SOLUTIONS FOR DIGITAL AGRICULTURE PROJECT IN KENYA

Josephine Mwikali Mbandi

A Dissertation Submitted in Partial Fulfillment of the Requirements for the Degree of Masters of Science in Embedded and Mobile Systems of the Nelson Mandela African Institution of Science and Technology

Arusha, Tanzania

August, 2021

ABSTRACT

The applications of Wireless Sensor Networks (WSN) and Internet of Everything (IoE) has changed how we obtain and consume information. Traditional farming has come a long way in accepting scientific methods to improve production. Smart Agriculture is one of the ways technology has greatly contributed to maximized crop production. Centrally placed labs and mobile soil labs have played a key role in this improved way of farming. Soil samples are collected from farms and analyzed to provide data to farmers, extension workers, and policymakers. This process takes time and is costly to implement. In addition, the definition of trends is difficult as replication of sampling requires more funding. This study proposes to connect end devices in an IoE system bringing in real-time data and at low-cost and also providing local data at local stations. The system is built incrementally to have a minimum viable product (MVP) using a combination of Agile and Waterfall methods of development. The system presents a pilot remote sensor module in a WSN using a Raspberry Pi minicomputer as an end node and three sensors collecting information on soil humidity and temperature, air humidity and temperature and soil pH values in real-time. A cloud-based data analysis and visualization are used. The system supports the ongoing work by soil labs by collecting information that is close to real-time. The study brings on board real-time data relaying of farm parameters that make it easier for small scale farm owners, extension officers, soil labs and other stakeholders to make instant informed decisions.

Key words: Internet-of-Everything, Real-Time-Data, Wireless-Sensor-Networks, Smart-Agriculture, Sensor-Systems, Cloud-Computing

DECLARATION

I, Josephine Mwikali Mbandi do hereby declare to the Senate of Nelson Mandela African Institution of Science and Technology that this dissertation is my own original work and that it has neither been submitted nor being concurrently submitted for degree award in any other institution.

Josephine Mwikali Mbandi		08/09/2021
Candidate	Signature	Date

The above declaration is confirmed by:

Dr. Judith Leo		8th September, 2021
Supervisor 1	Signature	Date
Dr. Michael Kisangiri		8/9/2021
Supervisor 2	Signature	Date
Dr. Andrew Sila		
Supervisor 3	Signature	Date

COPYRIGHT

This dissertation is copyright material protected under the Berne Convention, the Copyright Act of 1999 and other international and national enactments, in that behalf, on intellectual property. It must not be reproduced by any means, in full or in part, except for short extracts in fair dealing; for research private study, critical scholarly review or discourse with an acknowledgement, without the written permission of the office of Deputy Vice Chancellor for Academic, Research and Innovation, on behalf of both the author and the Nelson Mandela African Institution of Science and Technology.

CERTIFICATION

The undersigned certify that they have read and hereby recommend for acceptance by the Nelson Mandela African Institution of Science and Technology a dissertation titled " *Soil data collection using wireless sensor networks (WSN) and offside visualization: Case study of the innovative Solutions for digital Agriculture (iSDA) project in Kenya* " In partial fulfillment of the requirements for the degree of Masters of Science in Embedded and Mobile Systems of the Nelson Mandela African Institution of Science and Technology.

Dr. Judith Leo

Supervisor 1 Signature Date

Dr. Michael Kisangiri 8/9/2021

Supervisor 2 Signature Date

Dr. Andrew Sila

Supervisor 3 Signature Date

ACKNOWLEDGEMENTS

My heartfelt gratitude to my supervisors; Dr. Judith Leo who spend many days reviewing my work, Dr. Michael Kisangiri for his mentorship and Dr. Andrew Sila for walking with me through the daily tasks and providing direction.

My sincere appreciation goes to Nelson Mandela African Institution of Science and Technology (NM-AIST) management, technical staff, trainers and community for support and great research environment you provided during this project.

My acknowledgements go as well to The Centre for Excellence in IT (CENIT@EA) for their sponsorship of this study and program and to Innovative Solutions for Decision Agriculture (iSDA) within the World Agroforestry Centre (ICRAF) for opening their doors and availing their resources during this project.

Finally, my appreciation goes to my family for being able to bear with me during the Covid-19 challenges of working from home and consuming shared time and resources.

DEDICATION

To Andriannah, Callistus and Micah. Your inspiration and continued support and input is much appreciated.

TABLE OF CONTENTS

ABSTRACT i

DECLARATION ii

COPYRIGHT iii

CERTIFICATION iv

ACKNOWLEDGEMENTS v

DEDICATION vi

TABLE OF CONTENTS vii

LIST OF TABLES ix

LIST OF FIGURES x

LIST OF ABBREVIATIONS AND SYMBOLS xi

CHAPTER ONE 1

INTRODUCTION 1

1.1 Background of the problem 1

1.2 Statement of the problem 1

1.3 Rationale of the study 1

1.4 Research objectives 2

1.4.1 General objective 2

1.4.2 Specific objectives 2

1.5 Research questions 2

1.6 Significance of the study 2

1.7 Delineation of the study 3

CHAPTER TWO 4

LITERATURE REVIEW 4

CHAPTER THREE 6

MATERIALS AND METHODS 6

3.1 Materials 6
3.1.1 Materials for Prototype 1 6
3.1.2 Materials for Prototype 2 6
3.2 Methods 6
3.2.1 Study life cycle 7
3.2.2 Problem identification 7
3.2.3 System design 8
3.2.4 Solution design and implementation method 11
CHAPTER FOUR 12
RESULTS AND DISCUSSIONS 12
4.1 Results 12
4.1.1 Prototype 1 13
4.1.2 Prototype 2 18
4.1.3 Results viewed online 29
4.1.4 Output from the online platform 32
4.2 Discussion 33
CHAPTER FIVE 34
CONCLUSION AND RECOMMENDATIONS 34
5.1 Conclusion 34
5.2 Recommendations 34
REFERENCES 36
APPENDICES 39
PROJECT OUTPUT 51

LIST OF TABLES

Table 1: Comparison of agile versus waterfall methods 9

Table 2: Comparison of Prototype 1 versus Prototype 2 13

Table 3: pH probe conversion from mV to pH 27

LIST OF FIGURES

Figure 1: An adaptation of the Iterative project life cycle 7

Figure 2: User Story Development of an Agile-Waterfall Hybrid Method (Shimoda & Yaguchi, 2017) 10

Figure 3: System relations between local node, base station, and the Processing Unit 14

Figure 4: Flow diagram of the initial proposed system 14

Figure 5: Operation of a local node 15

Figure 6: Operation of a central node 16

Figure 7: Circuit connections for Prototype 1. Drawn using fritzing software 17

Figure 8: System Prototype 1 17

Figure 9: Operation of a wireless sensor network 18

Figure 10: System processes 19

Figure 11: Extract of smart farm C code (data collection) 19

Figure 12: JSON capture (full code in annex) 20

Figure 13: Circuit connections of Prototype 2 designed using fritzing 21

Figure 14: Testing of pH probe after calibration 23

Figure 15: Checking humidity of dry soil sample 24

Figure 16: Testing soil sample for slightly moist soil sample 25

Figure 17: Testing soil sample for wet soil 26

Figure 18: Raspberry pi GPIO pins labelled (eTechnophiles.com, 2021) 28

Figure 19: Online graphical interface and display 29

Figure 20: Accessing the online platform using a tag “nmaist-jmm” – step 1 30

Figure 21: Accessing the online platform using a tag "nmaist-jmm" – step 2 30

Figure 22: Accessing the online platform using a tag "nmaist-jmm" – step 3 31

Figure 23: Downloaded data from Thingspeak in excel 31

Figure 24: Results downloaded into excel for further manipulation 32

Figure 25: Real-time data collected from test node 32

LIST OF APPENDICES

Appendix 1: Data sheet – h-101 pH electrode 39

Appendix 2: Data sheet – SHT1x..... 40

Appendix 3: Data sheet – DHT22..... 41

Appendix 4: System C code for calibration pH meter on Arduino UNO 42

Appendix 5: Sensors – C code for SHT1x, DHT22 and ADS1115..... 45

Appendix 6: Parts and specifications of a raspberry pi..... 48

Appendix 7: What pH stands for and the range 49

Appendix 8: Interview form used for requirements elicitation..... 50

LIST OF ABBREVIATIONS AND SYMBOLS

ADC	Analogue Digital Converter
AfSIS	Africa Soils Information Services
BNC	Bayonet Neill–Concelman
CENIT@EA	Centre for Excellence in ICT in East Africa
CLI	Command Line Interface
EAC	East African Community
GDP	Gross Domestic Product
GSM	Global System for Mobile Communication
GUI	Graphic User Interface
ICRAF	World Agroforestry Centre
IDE	Integrated Development Environment
IoE	Internet of Everything
iSDA	innovative Solutions for Digital Agriculture
LCD	Liquid Crystal Display
NMAIST	Nelson Mandela African Institute of Science and Technology
pH	potential Hydrogen
SCL	Serial Clock Line
SD card	Secure Digital Memory card
SDA	Serial Data
VCC	Supply voltage
VDD	Operating Voltage
WSN	Wireless Sensor Networks

CHAPTER ONE

INTRODUCTION

1.1 Background of the problem

Kenya and Tanzania are member countries of the East African Community (EAC, 2019). In both countries, agriculture plays a key role in the respective economy (Food and Agriculture Organization of the United Nations [FAO], 2018). According to the FAO (2018), agriculture is key to Kenya's economy, contributing 26 % of the Gross Domestic Product (GDP) and another 27 % of GDP indirectly through linkages with other sectors (Food and Agriculture Organization of the United Nations, 2018). The sector employs more than 40 % of the total population and more than 70 % of Kenya's rural people (FAO, 2018). A world bank press release (World Bank, 2019) also indicates that in Tanzania, the agricultural sector provides livelihoods directly to around 55 % of the population (and three quarters of the poor) and indirectly to a further 15 % within related value chain functions such as traders, transporters and processors (World Bank, 2019).

1.2 Statement of the problem

Overuse of pesticides and fertilizer in agricultural fields has led to destruction of the crops and reduced the efficiency of the field increasing crop losses. This has led to land degradation and continued increase in hunger among the world’s most poor communities (Neina, 2019a). This coupled with limited and delayed information to farmers increases the soil vulnerability toward pest.

1.3 Rationale of the study

Some of chemical indicators of soil health include Nitrogen, phosphorus, Potassium, organic matter, soil organic carbon and potential Hydrogen (pH) while some of the physical indicators are texture, aggregate stability, density and porosity. Of note, also soil microbial activity and soil respiration have been used as bio indicators of soil health (Bünemann *et al.*, 2018). Soil pH, soil moisture and temperature provide definitions of most conducive environments for crop germination and growth (Senagi *et al.*, 2017; Bünemann *et al.*, 2018). The IoE applications may be used to update the farmer and extension officer about type and quantity of pesticides and fertilizers required by the crop. Therefore, in this study three parameters were collected, to

ascertain the physical conditions of a particular soil with some information of the chemical structure. The study is able to ascertain the needs in a particular sample.

1.4 Research objectives

1.4.1 General objective

The study main aim is to develop an effective supportive system for the iSDA project that collects real-time data that can be used to confirm sample area parameters with lab sample data collected in the same area previously. Specifically, this study follows the four steps of review, design, development and evaluation to complete these three objectives.

1.4.2 Specific objectives

(i) To analyze requirements for design of the proposed system

(ii) To design and develop the proposed system

(iii) To test and validate the developed system

1.5 Research questions

(i) How to choose the ideal microcontroller that incorporates the various sensors that will monitor the physical soil parameters?

(ii) What technologies to use to transmit the soil data to an available online centralized location for easy access by all stakeholders?

(iii) Which web application will support the data providing ease of integration and which communication protocols will work synchronously?

1.6 Significance of the study

This study is expected to make contributions to science, industry and agriculture in the following ways:

(i) Sethi and Sarangi (2017) in their research defined Internet of Things as a paradigm in which objects equipped with sensors, actuators, and processors communicate with each other to serve a meaningful purpose. They surveyed state-of-the-art methods, protocols, and applications in the emerging technology. In this study, the same technologies are

used to make soil analysis more efficient and prompt in providing up to date data to farmers, extension officers and other stakeholders.

(ii) Food and Agriculture Organization of the United Nations (1980) in a document provides soil testing and analysis protocols that has effectively been used from 1980 and although the inferences made in physical soil samples does not change much, the technologies have improved over the years (Food and Agriculture Organization of the United Nations, 1980). Incorporation of wireless sensors and an online real-time platform in this study provides one extra perspective to the soil analysis hence giving the information consumers more concrete output for decision making during crop growth and production.

1.7 Delineation of the study

The system that has been developed used the microprocessor raspberry pi, which is a low cost, high performance development board. It also used three sensors for each node i.e. DHT22, SHT10 and pH electrode 110. Two of the sensors were digital modules - the DHT22 and SHT10 while the pH electrode needs an analogue to digital converter ADS1115 to relay data the raspberry pi. The three sensors send data to be displayed on to a web based online platform through an application Thingspeak. The web based application has the capacity to store the data collected online. It also provides the interface to download and further manipulate the data as and when needed. This data is downloaded as CSV or as a PDF file depending on need of the user.

CHAPTER TWO

LITERATURE REVIEW

In agriculture, soil is considered to be the critical element of life support systems as it delivers several ecosystem requirements such as carbon storage, water regulation, soil fertility and food production (Neina, 2019a), which have effects on the well-being of both plants and animals (Neina, 2019b). Soil is the major source of nutrients for crops as it provides support to the plant growth, hence, soil health and soil maintenance are the key issues to sustain crop productivity (Mukhopadhyay, 2020). There is need for increased food production and as such an increased need for higher returns from agriculture. This makes the rational use of mineral and organic fertilizers imperative, particularly because these inputs are dependent on price fluctuations on the world market which affect the economics of their use (Food and Agriculture Organization of the United Nations, 1980).

Agricultural intensification through the implementation of Smart Agriculture has been recognized as one of the solutions to increase food production to feed the ever-increasing population in Sub-Saharan Africa (Takoutsing *et al.*, 2016). In the context of this study, Smart Agriculture is defined as the usage of emerging technologies. These emerging technologies include the Internet of Things, the use of sensors, location systems both ground monitoring and satellite based, robots and artificial intelligence on your farm (Hickman & Jonathan, 2021). Smart farming has also been defined by the Encyclopedia as the technological innovation adoption in agriculture. This is a type of an innovative conceptualization and management of the several resources in light of the increasing data availability (Encyclopedia, 2010). It is also considered that the use of information driven smart farming is a general trend to be observed in agriculture (Bach & Mauser, 2018). Smart Agriculture has developed a long way and grown to be incorporated first in large scale crop production using robots and more recently in small scale farming using a range of more modern tools and schemes such as applications of Internet of Everything (IoEs) and Wireless Sensor Network (WSN) (Tillett, 1995; Adamides, 2020). According to Patil (2003) WSN can be described as a group of spatially dispersed and dedicated sensors for monitoring and recording the physical conditions of a targeted environment and organizing the collected data at a central location. Similar definitions have been given previously in 2008 and as recent as 2020 (Ashton, 2008; Transtutors.com, 2020). The continued growth of Smart Agricultural through the use of IoEs and WSN has come into play to maximize agricultural production. However, most of the implementation of Smart Agricultural, energy

and communication sectors through the use of IoEs and WSN have been done in developed countries; hence they are mainly designed with specific markets in mind and therefore, not suitable for our context, that is, developing countries including Kenya and Tanzania. Due to these scenarios, most of the time these technologies trickle down with limited uptake and sometimes remains as shelved solutions (Adamides, 2020). This is to mean an off the shelve solution is not suitable to use within our climatic conditions, security concerns and safety needs and thus requires customization and calibration to suit the market. Decision making has however, moved from traditional predictions which were based on predictions not supported by data to become data driven. Real-time and accurate data can be achieved with use of IoEs and WSNs without expansive implementation costs that have been associated with other technologies. Due to their importance and real case scenarios on the use of IoEs and WSN in Smart Agriculture, and specifically towards enhancing the agricultural production (Wang, 2011; Lado, 1998), this study proposes the development of a low-cost soil data collection system through the use of IoEs and WSN and then display the collected data in an offsite visualization platform. The proposed system will be implemented at innovative Solutions for Digital Agriculture (iSDA) project which is in Kenya.

The innovative Solutions for Decision Agriculture (iSDA), was founded in 2008 under the Africa Soils Information Services (AfSIS) which worked on a digital soil map of Africa (World Agroforestry Centre [ICRAF], 2018). The iSDA project is currently working on analysis of soil samples collected from various parts within Kenya and Tanzania. The analyzed data helps in land health decisions and provides the extension officers with valuable farmers' information. Currently, iSDA project is using an in effective system which allows field officers to collect data from various fields and then the samples are thoroughly tested in the centralized labs in Nairobi – Kenya. This process is tedious, time consuming and in some cases may be prone to errors. Follow up on trends in the location that the data is sampled in also challenging hence making definition of trends within the area difficult. Hence, this study aims at bridging the gap of lack of knowledge on how to innovatively implement low cost and effective Smart Agriculture through the use of IoEs and WSN by developing a soil data collection tool using the parameters of temperature, irradiance, soil pH and humidity to determine the best inputs needed for ideal production.

CHAPTER THREE

MATERIALS AND METHODS

3.1 Materials

3.1.1 Materials for Prototype 1

The hardware required for the end point of the system: Raspberry pi 3B and accessories for the mini-computer (Screen, mouse, keyboard and SD card), Arduino UNO, a GSM module and SIM card (local network), Sensors (Humidity & temperature sensor, soil moisture sensor, PH sensor, EC sensor and irradiance sensor, 4 LCD screen for local display, Connectors, Resistors and Buzzers, Hard drive for storage.

Software needed: MATLAB and Simulink, Arduino IDE, NOOBS - The Operating System (OS) needed to setup a RaspberryPi, Geany – a linux platform on Raspberry pi board.

3.1.2 Materials for Prototype 2

In this design the study worked with a raspberry pi 3B+ model and three sensor modules. The SHT10 – soil moisture and temperature sensor, the DHT22 – ambient air temperature and humidity sensor and the H-101 pH electrode – soil pH sensor.

As the raspberry pi operates with GPIO (General purpose input/output) pins which are discrete, the circuit is adjusted to have an Analogue to Digital (ADS1115) converter for the pH sensor which is analogue sensor.

The system was designed in Fritzing which is an open-source hardware initiative that makes electronics accessible as a creative material for anyone (Fritzing, 2019). It offers a software tool, a community website and services.

3.2 Methods

This section of the report discusses the procedures used in carrying out the project. Four methods were used. The first was to ascertain that each iterative cycle considered all new knowledge acquired, the second was to find actual collection of data from stakeholders and third was the inclusion of the said data in design and finally was the development method of the system and solution.

3.2.1 Study life cycle

To achieve this method, the study used this iterative cycle throughout the project life:

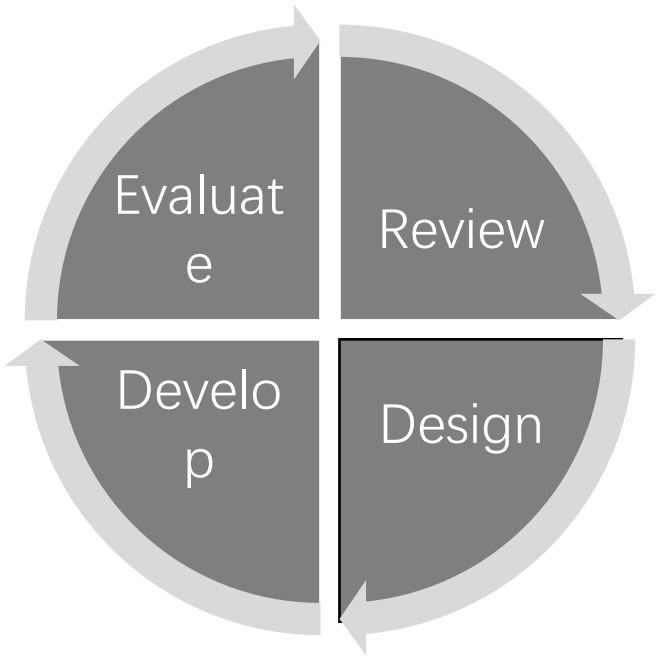

Figure 1: An adaptation of the Iterative project life cycle

The requirements from the iSDA project were evaluated following interviews, the review of the expected system was made: User requirements defined and then the design was made. Using the system design, then a prototype was developed and the process iterates.

3.2.2 Problem identification

In this stage, interviews were conducted with various stakeholders: Being staff in soil testing labs, extension officers and farmers. There were 20 % extension officers, 30 % were soil analysis staff, 20 % were farmers and 20 % were information technology professionals who have worked on similar challenges. The necessity of these interviews was to understand the flow of information and the processes involved from soil sample taking on farms all the way to dissemination of information, the timelines and existing gaps. Observations were also made during this stage of the study in various small scale farms within Kitui and Kiambu Counties in Kenya. In addition to the three identified groups, the study also met and interviewed administration staff attached to national government offices at the village level that provide both information and sample products to farmers.

The interviews set out to answer three questions being:

(i) What is the current information the extension officer, farmer or soil testing staff has in relation to soils within their jurisdiction?

(ii) What areas would he/she deem fit for improvement in terms of getting useful information for crop production and specifically in physical soil management?

(iii) What was their last fertilizer application and why did they choose it?

With answers to these three questions in general, the interviews provided an insight as to the flow of information between the soil testing labs, the extension officer and the farmer. The timelines between sharing of information and the use of the said information for decision making. Also by collecting information about the location of the interviewees, their lines of reporting and channels of communication, it was possible to confirm which processes could be optimized.

This was done through an iterative process of the semi-formal interviews, with each iteration, the interviewees added input to the concept note, the design process and the testing the system. This was complemented by literature review.

3.2.3 System design

The study period was limited. In terms of time the study was to be completed in 6 months and had a limited budget hence limited on number of prototypes that could be tested and improved. In addition, the scope was defined in relation to the requirements of the industry: In this case the iSDA project. For these reasons, the study reviewed both agile and the waterfall method and combined the two methods. The agile methodology and the waterfall methodology both have desirable factors, however for clarity the major differences. Table 1 highlights these differences.

Table 1: Comparison of agile versus waterfall methods

AGILE	WATERFALL
An incremental and iterative approach ideal for the product construction.	A linear and sequential approach that enables one to see the milestones.
Separates a project into sprints. Breaking mammoth milestones into achievable tasks	Divides a project into phases. Making easy time management.
Introduces a product mindset with a focus on customer satisfaction and this worked well for iSDA project.	Introduces a project mindset with a focus on successful project delivery. Necessary for milestones checks.
Allows requirement changes at any time, which allowed for improvement of the prototype and teams participated.	Avoids scope changes once the project starts and allowed for consistency in project objectives.
Testing is performed concurrently with development. This allowed for system correctness checking.	Testing phase comes only after the build phase in. This provided for usability testing.
Agile enables the entire team to manage the project without a dedicated project manager.	Waterfall requires a project manager who plays an essential role in every phase.

The study deployed a combination of waterfall and agile development methodologies with prototyping for the development of a viable product. The waterfall allowed for management of time constraints and review of milestones. The approach has been proven to work successful by Shimoda and Yaguchi (2017) who implemented similar approach in their study related to a method that manages user stories and common objects in a matrix to achieves early realization of value and low cost.

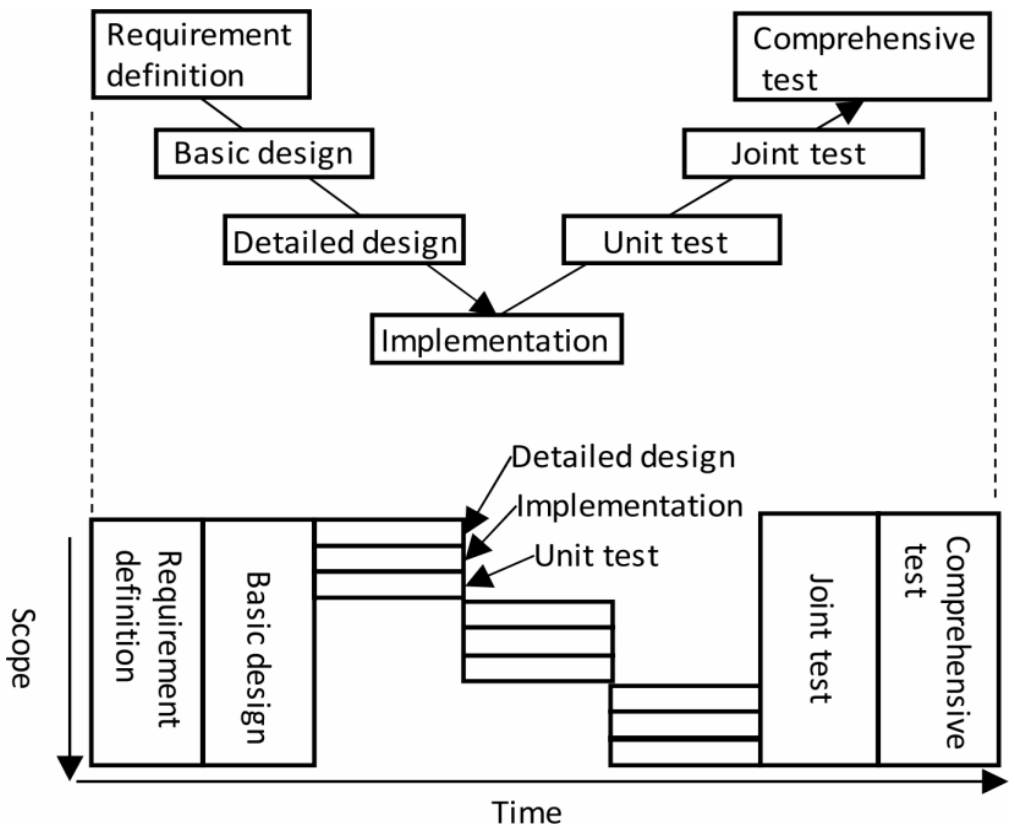

Figure 2: User Story Development of an Agile-Waterfall Hybrid Method (Shimoda & Yaguchi, 2017)

In addition, the study considered using these methodologies because; the waterfall method provides a step-by-step quantification of ongoing work that is easily measurable whereby the prototype can easily assist in product implementation. The Fig. 2 above shows a depiction of this method as described by Shimoda and Yaguchi (2017). The prototyping methodology works well for this study as there is a need of continual testing with system users and incorporation of new requirements from the iSDA. Furthermore, through the use of these methodologies, the study easily related objects early in the development by following the four stages of development which includes review, design, development and evaluation.

To start, the study reviewed and analyzed the existing system within iSDA and other stakeholders whereby interviews and questionnaires were administered to both field officers and other project implementation members. The interviews were conducted with one data scientist and analyst, three data collectors, two field extension officers and three fruit farmers, one small scale mixed crop farmer. The collected data was sorted and analyzed and the scope of this study was established. Then, the study expanded the design of the system to show how each the part of the system can be integrated and modified which was then followed by review

of logical design and circuit simulation for inter-dependencies. With design clarity, the study produced a low fidelity prototyping to test acceptability.

3.2.4 Solution design and implementation method

This study used a 2 dimensional approach to prototyping: Physical and analytical (Camburn *et al*., 2017). Physical prototypes are tangible approximations of the intended product, whereas analytic or virtual versions are more commonly used to create a detailed and mathematically correct model of a specific product component (Camburn *et al.*, 2017). The same is also confirmed by Otto and Ho (1996).

CHAPTER FOUR

RESULTS AND DISCUSSIONS

4.1 Results

This chapter discusses the steps taken during the study in detail. The initial design (Prototype 1) was based on the proposal made. While the Prototype 2 improves on the prototype based on the results of the 1st Prototype. The final system is tested for output consistency, for proper calibration and availability.

The main objective of this work was to develop an effective supportive system for soil labs that collects real-time data that can be used to confirm sample area parameters with lab sample data collected in the same area previously. The scope in this phase includes prototyping and testing of Prototype for data collection remotely and in real-time. To do this, we followed the steps in methodology above: Review, design, development and evaluation.

The study implemented the project using the 2nd Prototype, however, this was after the improvement of the first Prototype which had been put forth in the proposal. Table 2 highlights the main differences with the two Prototypes.

Table 2: Comparison of Prototype 1 versus Prototype 2

Prototype 1	Prototype 2
Used 2 boards. Arduino Uno as a local node and raspberry pi as a central node	Uses a raspberry pi, adopted to act as both local and central node
Required 2 networks. GSM and WiFi (one between the nodes and one for visualization)	Requires 1 network for transmission. WiFi
Cost more in hardware for each complete system with more moving parts	Costs less with more compactness
Board Arduino UNO- $35, GSM module - $100 Raspberry pi - $50, MiFi - $45	Raspberry pi - $50, MiFi - $45
Sensors and other parts are equally priced	Sensors and other parts are similarly priced
Unreliability for the GSM module made the data not always available or consistent	Use of WiFi for data transfer allows for available and consistent data

4.1.1 Prototype 1

The 1st Prototype was tested in ideal lab conditions. The system has three operating blocks. The local node or sensor node, the base station node and the visualization system within the CPU.

Figure 3 shows the flow of data between the various blocks and defines the iterative process of the system. The four sensors on the local/sensor node provide information for salt levels, soil pH, irradiance (solar intensity) and soil moisture. This information is then transmitted via a GSM module to the central system and further on for processing, storage, visualization and decision making.

Figure 4 shows the block areas of the proposed systems and how the three blocks interact. The sensor/local node is activated by the central node and then it starts to collect data. This data is stored locally and processed to remove noise, define units and modulated in readiness to send. The transmitted data is then received at the central node and it is further processed and aggregated to have all the data from the various nodes. This data is then sent to a CPU for further analyses and visualization.

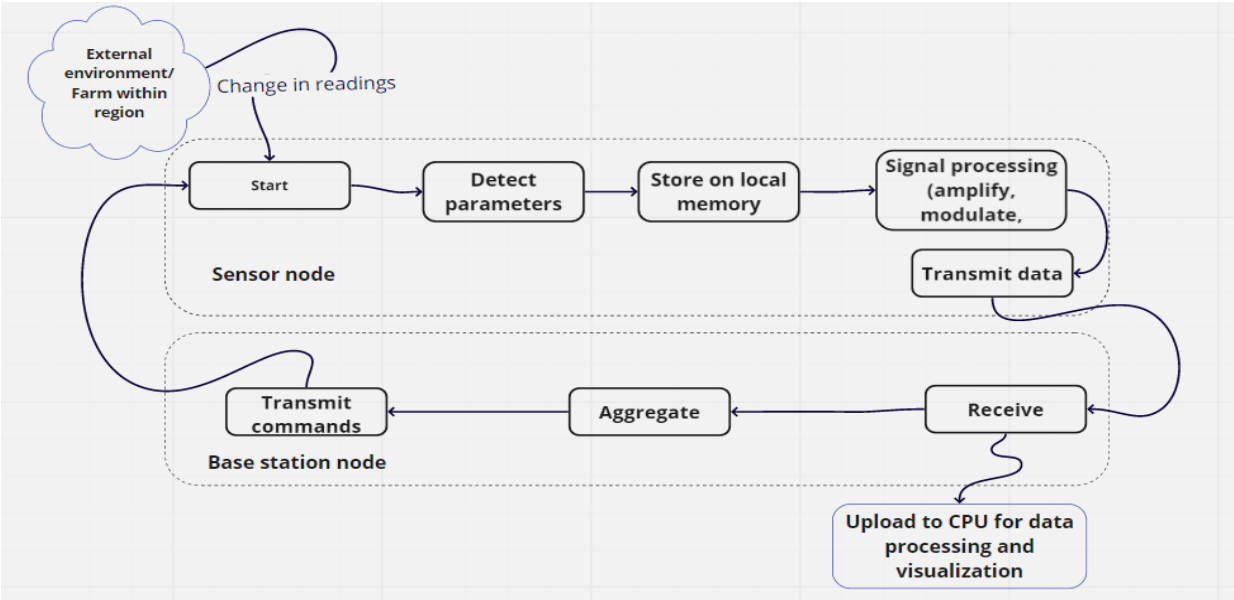

Figure 3: System relations between local node, base station, and the Processing Unit

The data from the sensor node is transmitted via a gateway to the base station node. It is then processed here for aggregation and then send to the CPU for further manipulation.

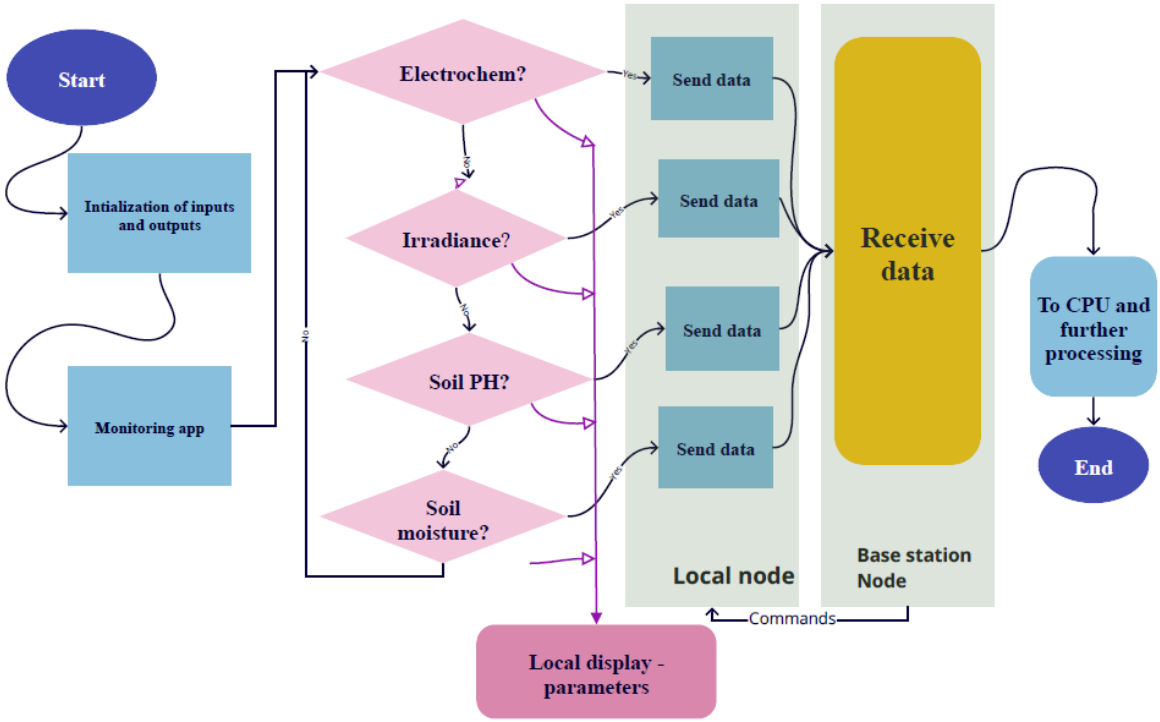

Figure 4: Flow diagram of the initial proposed system

Figure 4 shows the various blocks of Prototype 1. This was the proposed system at the start of the study. The sensor block transmits data to the base station and the base station them compiles and visualizes the said data. The workflow of the monitoring system generally consists of taking readings from the sensors at predefined time intervals, converting readings from voltages and current to relevant data at a local level using an Arduino UNO. The data is then displayed locally and also sent via a GSM module to a centralized node. This prototype used a Raspberry Pi. Here it is visualized online. A copy is also kept for statistical representation. The local node then goes to sleep, and wakes up and repeats the previous steps.

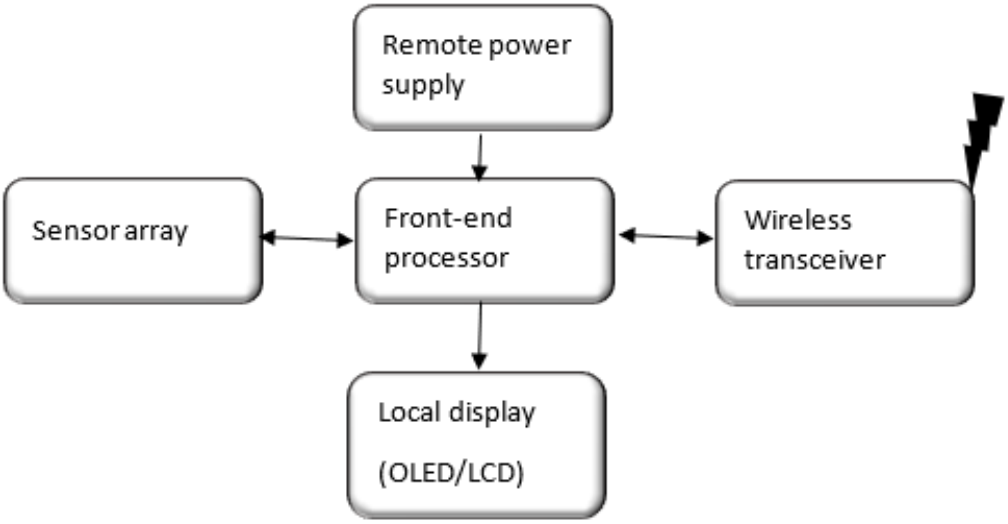

Figure 5: Operation of a local node

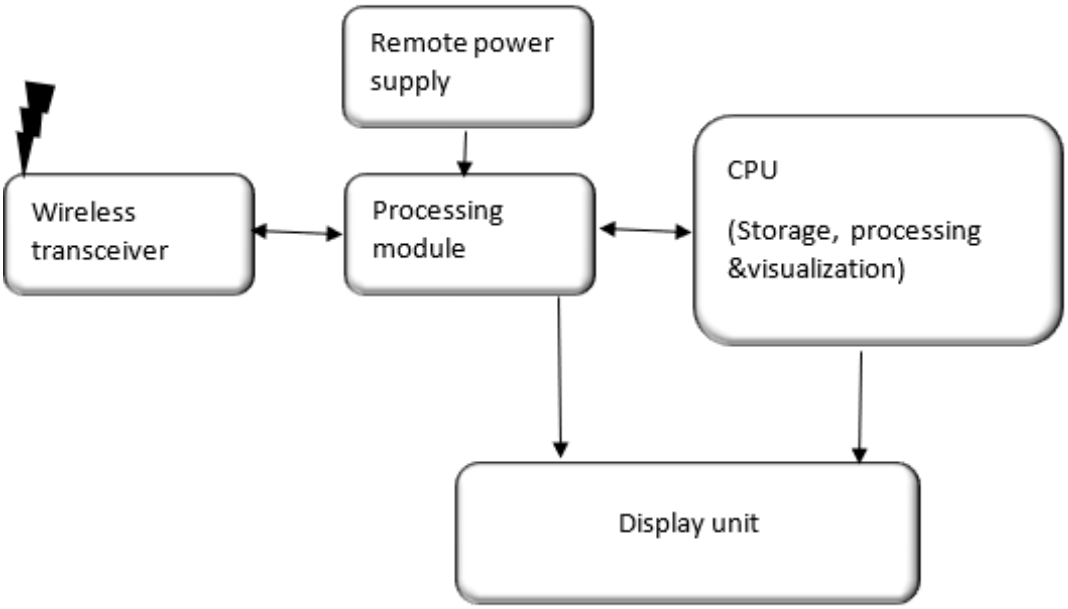

Figure 6: Operation of a central node

The Fig. 5 and Fig. 6 show the local node and the centralized node of the 1st Prototype. The local node on Fig. 5 consists of the sensors, the local microcontroller system and a transceiver. A local display is added to be able to see output onsite. The device is powered remotely. This local node is to collect data via the sensor array and convert it onto readable format via the microcontroller and said the said data to the main/ central node/ base station node.

The base station node which is showed on Fig. 6 receives data from the end nodes (local nodes). The collected data is then aggregated and processed for inferencing and correction. It has a wireless transceiver to get signals from the field (local node), a power supply, a processor unit and a storage unit. It also provides a display of the processes as an external accessory. If needed, new commands are sent to the local node and the aggregate data is sent to the Central Processing Unit (CPU) for further processing. The CPU is part of the base station node.

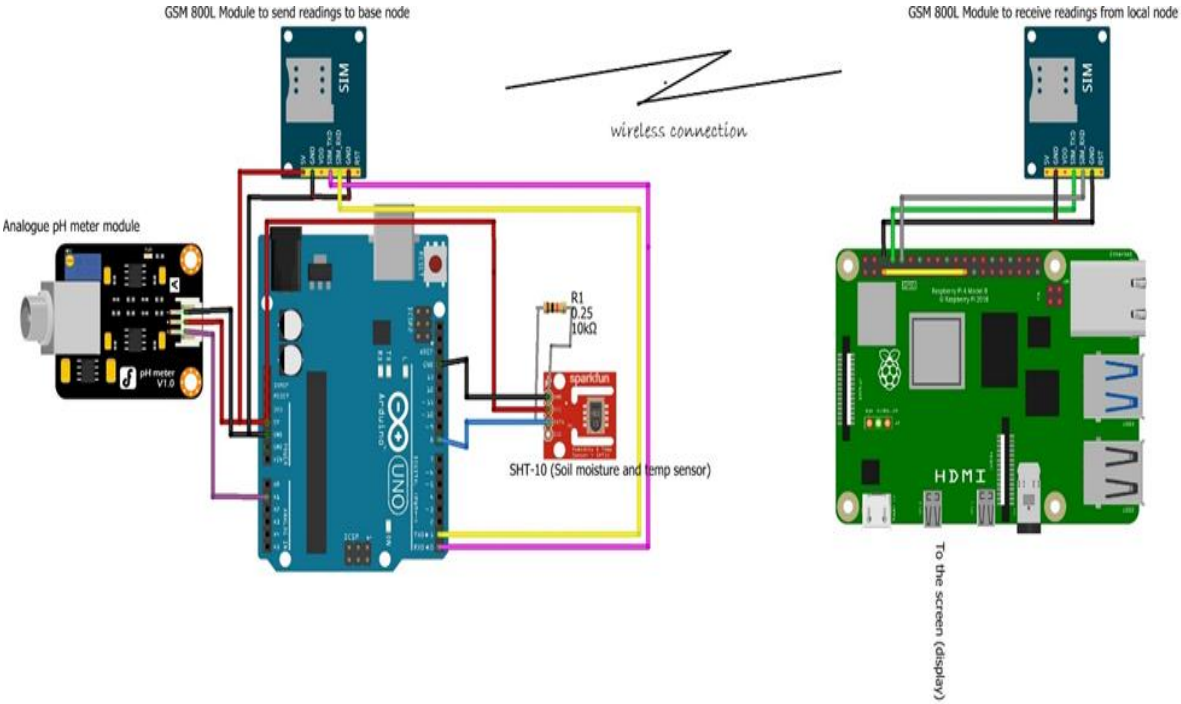

Figure 7: Circuit connections for Prototype 1. Drawn using fritzing software

The prototype was tested and the Fig. 8 shows the connected device during verification. The data sent was not consistent nor always accurate.

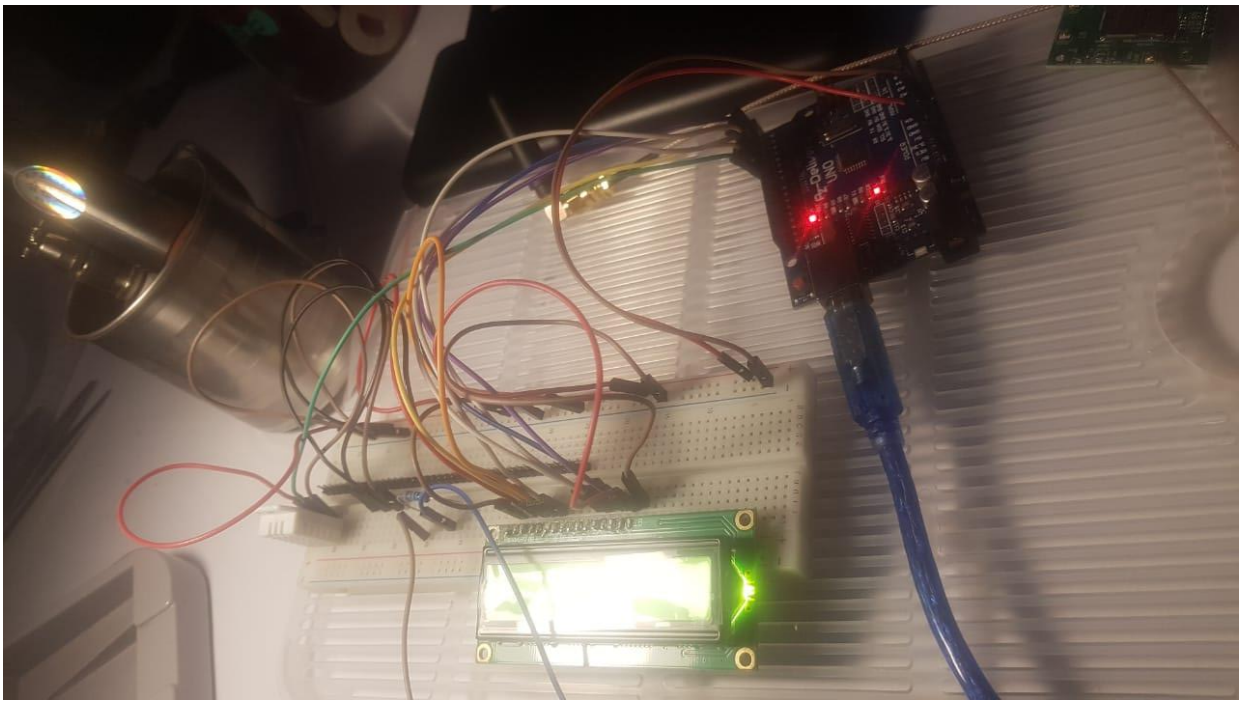

Figure 8: System Prototype 1

The output was dependent on each sensor and hence the delay just from the sensor runtime combination of the three required a delay of at least 30 seconds. In addition, the GSM shield failed twice and the local display of LCD 16x2 was not ideal for collecting details of five parameters. This could be adjusted to a 20x4, however, it would increase the bulk of the end node. The Arduino UNO board is convenient for development with a large online community but it is not easy to reproduce the same results for real-time unmonitored end nodes.

In calculating the cost of this node, this study found that the design needed readjustment and hence the requirements were reviewed and evaluated to determine if the design was at its most efficient.

4.1.2 Prototype 2

The 1st Prototype was a little bulky and cumbersome to use and the study worked on improving the Prototype by adjusting the end node to have a raspberry pi device and the input readings to all be converted to digital inputs. The collected data was also now available on the online platform directly from the local device.

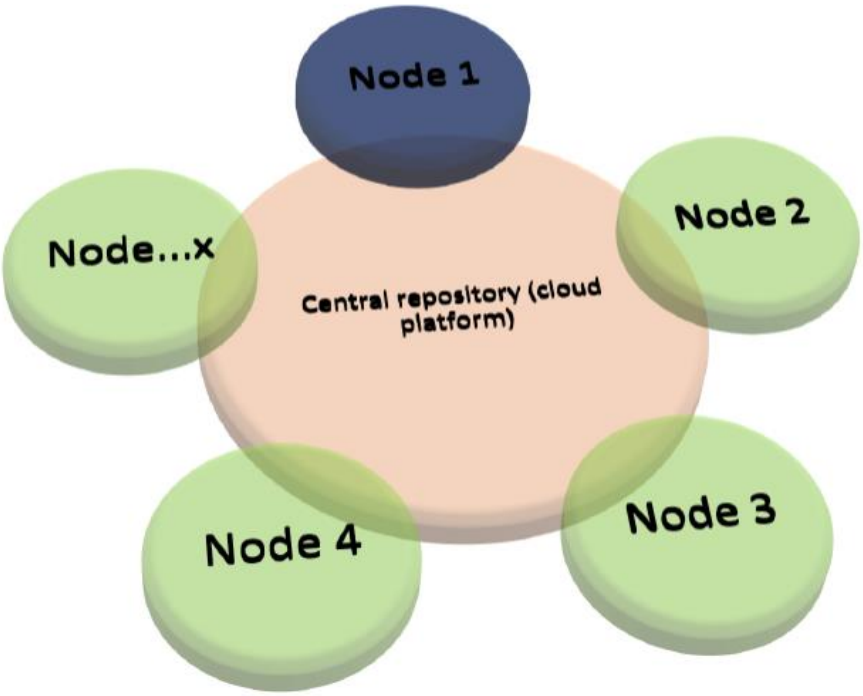

Figure 9: Operation of a wireless sensor network

To have a WSN several nodes sent data to a centralized node or repository. It can be point to point. Wireless Sensor Networks (WSN) can either be distributed or centralized (Carlos-

Mancilla *et al*., 2016). In this study, the centralized approach was used and one node was designed and tested (Node 1). The implementation was setup in four stages as shown in Fig. 10, however, the project life was iterated with each prototype following the methodology described in Section 2 of review, design, development and evaluation.

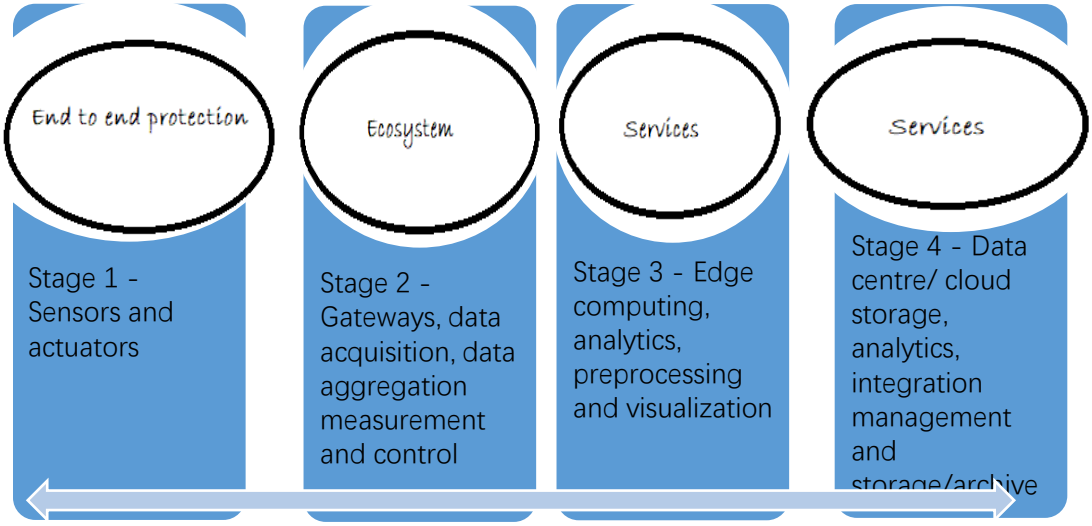

Figure 10: System processes

At stage 1, the system used 2 digital sensor modules to collect both soil and air temperature and humidity. At this stage, the study also used an analogue sensor module to collect pH values.

*SmartFarm - Notepad

File Edit Format View Help

```
//===========================================================================
// Name        : SmartFarm.cpp
// Author      : JMM

//===========================================================================
#include "SmartFarm.h"

#include <stdio.h>
#include <errno.h>
#include <stdlib.h>
#include <string.h>
#include <unistd.h>

#include "SmartFarm.h"

int main(void)
{
        fd_set readfds;
        int activity,max_sd=0,ret;
        struct timeval timeout;
        struct tm *tm;
        time_t ltime;
        int ret_val = 0;
        time_t start_t, end_t;

        struct LIO *lio = (struct LIO *)malloc(sizeof(struct LIO));
        if(!lio)
        {
                exit(EXIT_FAILURE);
        }

        lio->lio_id = 10;
        strcpy(lio->lio_name,"ads1115");

        if(LIO_Init((void*)lio))
        {
```

Figure 11: Extract of smart farm C code (data collection)

In Fig. 11, the study shows the main code used in design of the operation of the sensors and the various libraries needed so as to have all three sensors (pH electrode via the SDS1115, the SHT10 and DHT22) working together via the same board.

At stage 2, the ecosystem of the project was defined. The local data is encapsulated in JSON and send to the internet platform for display, analysis and storage.

```
#ifdef false
#undef false
#endif
#define false ((cJSON_bool)0)

typedef struct {
    const unsigned char *json;
    size_t position;
} error;
static error global_error = { NULL, 0 };

CJSON_PUBLIC(const char *) cJSON_GetErrorPtr(void)
{
    return (const char*) (global_error.json + global_error.position);
}

CJSON_PUBLIC(char *) cJSON_GetStringValue(cJSON *item) {
    if (!cJSON_IsString(item)) {
        return NULL;
    }

    return item->valuestring;
}
```

```
#ifdef false
#undef false
#endif
#define false ((cJSON_bool)0)

typedef struct {
    const unsigned char *json;
    size_t position;
} error;
static error global_error = { NULL, 0 };

CJSON_PUBLIC(const char *) cJSON_GetErrorPtr(void)
{
    return (const char*) (global_error.json + global_error.pos:
}

CJSON_PUBLIC(char *) cJSON_GetStringValue(cJSON *item) {
    if (!cJSON_IsString(item)) {
        return NULL;
    }

    return item->valuestring;
}
```

Figure 12: JSON capture (full code in annex)

Stage 3, is part of the services provided by the system. The platform Thingspeak provides analytics and storage of the readings. These can later be downloaded as a CSV file or onto a mobile app.

Stage 4, has an online graphical representation of the data and has been developed in a way that other third party systems can plug in to download the available real time data.

The hardware is embedded with the necessary software to enable the various parts work together. To accomplish this, this study did parallel programming to avoid loops and interdependence if running sensors, this means each sensor will run independently and not affect the running of the other two during their lifetimes. The C scripts were combined using JSON and displayed onto an online platform –Thingspeak. The study did consider other online platforms, however, Thingspeak provided ease of operability by the teams, scalability in case of future added channels and functionality and flexibility to work with IoE systems. All sensors

store values locally on the raspberry pi and readings are also pushed on the cloud platform – Thingspeak. To confirm calibration of equipment, the temperature sensors were tested at room temperature against and indoor thermometer. The pH sensor is calibrated using buffer solution.

This 2nd Prototype accomplished the objective effectively of the project which was stated under scope as to develop an effective supportive system for the iSDA project that collects real-time data that can be used to confirm sample area parameters with lab sample data collected in the same area previously. Specifically, this study set out to review, design, develop and evaluate. The requirements for design of the proposed system were reviewed, then the design was completed and the development the proposed system was done. With the output, the tests were done and the system was validated.

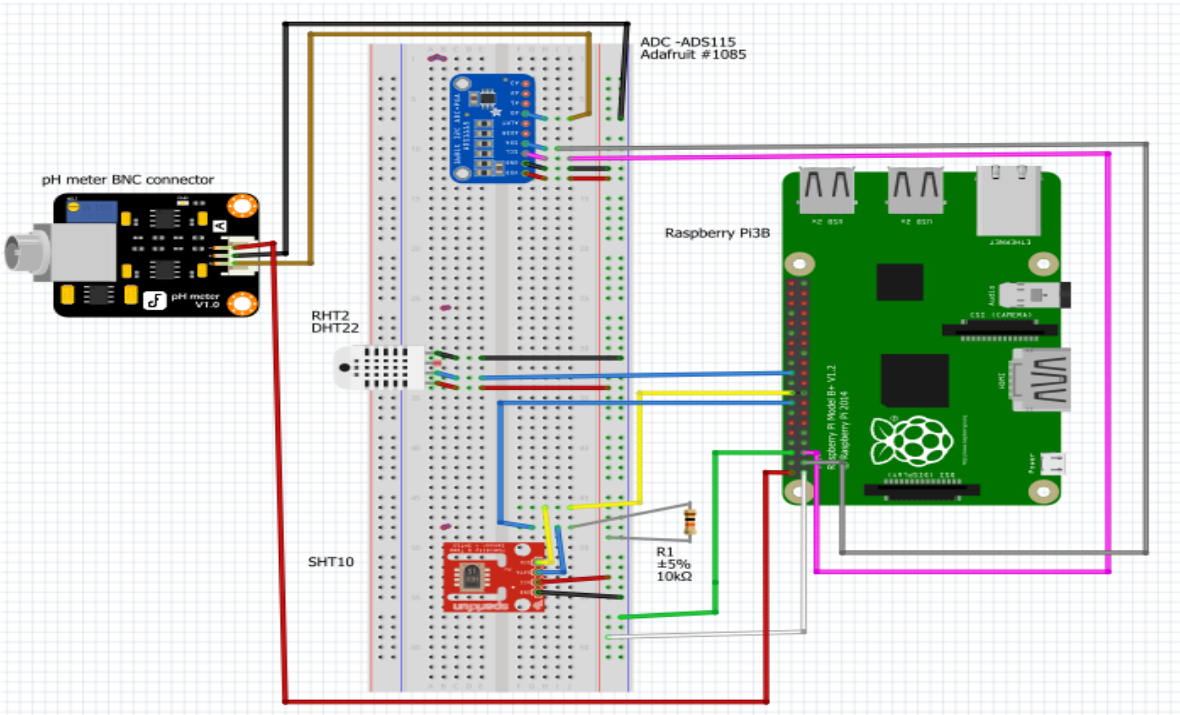

Figure 13: Circuit connections of Prototype 2 designed using fritzing

The Fig. 13 shows the final prototype of the system which consists of a development board: Raspberry pi 3B+, an ADC (analogue digital converter ADS1115) that is connected to the pH electrode and used to convert analogue input signals into digital signals that a raspberry pi board can read. Also connected are the other 2 sensors used in this study: A DHT22 and SHT10 for ambient air temperature and moisture as well as soil temperature and moisture measurements respectively. All connections are shown via breadboard for ease of identification.

With this study, three sensors were installed on one node and the system has collected parameters from a soil sample for 22 days and amassed a total of 192 183 readings and continues to read parameters from this node. The visualization of the system is loaded onto Thingspeak on the following public channel - https://thingspeak.com/channels/1327079 and it can also be searched for with the tag “nmaist-jmm”.

This study coded the system using C language and Geany IDE, a powerful, stable and lightweight programmer's text editor that provides useful features (Contributors, 2021). Geany IDE combines Command Line Interface (CLI) with a few features from Graphical User Interface (GUI). It has short load times like CLI but also ease of use like GUI. It has with limited dependency on separate packages or external libraries on Linux and is available as a package on the raspberry pi.

Once the system was connected, coded and readings were taken, then the first sensor (pH electrode) was calibrated and tested. The Fig. 14 shows the system being tested against orange juice which is an acidic liquid known to be between 3 to 3.5 pH. Still clean water is usually between 6 to 7.9 pH. Liquid soap known to be alkaline with a value of between 9 to10 pH.

	A	B	C	D	E	F	G
1	created_at	entry_id no.	Ambient temperature	Ambient humidity in %	Soil temperature	Soil humidity	soil pH
4537	2021-03-19 13:35:24 EAT	4536	26	66	24	81	2
4538	2021-03-19 13:35:30 EAT	4537	26	66	24	81	2
4539	2021-03-19 13:35:36 EAT	4538	26	66	24	81	2
4540	2021-03-19 13:35:42 EAT	4539	26	66	24	81	2
4541	2021-03-19 13:35:49 EAT	4540	26	66	24	81	2
4542	2021-03-19 13:35:55 EAT	4541	26	66	24	81	3
4543	2021-03-19 13:36:01 EAT	4542	26	66	24	81	3
4544	2021-03-19 13:36:07 EAT	4543	26	66	24	81	3
4545	2021-03-19 13:36:13 EAT	4544	26	66	24	81	3
4546	2021-03-19 13:36:19 EAT	4545	26	66	24	81	4
4547	2021-03-19 13:36:25 EAT	4546	26	66	24	81	4
4548	2021-03-19 13:36:31 EAT	4547	26	66	24	81	4
4549	2021-03-19 13:36:37 EAT	4548	26	66	24	80	4
4550	2021-03-19 13:36:43 EAT	4549	26	66	24	80	4
4551	2021-03-19 13:36:49 EAT	4550	26	66	24	80	4
4552	2021-03-19 13:36:56 EAT	4551	26	66	24	80	5
4553	2021-03-19 13:37:02 EAT	4552	26	66	24	80	7
4554	2021-03-19 13:37:08 EAT	4553	26	66	24	80	7
4555	2021-03-19 13:37:14 EAT	4554	26	66	24	81	7
4556	2021-03-19 13:37:20 EAT	4555	26	66	24	80	7

readings as at 12th April 2021

Figure 14: Testing of pH probe after calibration

The probe was inserted in orange juice and then tap water and finally into liquid soap. The known pH of orange juice is between 2 pH and 3 pH while water can be anything between 6 pH to 9 pH. Liquid soap ranges from 7 to 8 as per packaging label. The Fig. 14 shows the reading 4536 to reading 4544 where the probe was inserted in orange juice. Reading 4545 to 4551 the probe was inserted in water. In this case the probe was not cleaned immediately after

extraction from the orange juice and the delay is about 15 seconds for changes. It was finally inserted in the soap solution afterwards and this is indicated in reading 4552 to 4555. Other important specifications of the probe to note are that it has a response time of 10 seconds and a drift of maximum ≤ 0.02 pH in 24 hours.

1	created_at	entry_id no.	Ambient temperature	Ambient humidity in %	Soil temperature	Soil humidity	soil pH
223186	2021-04-12 14:43:46 EAT	223185	25	59	25	65	5
223187	2021-04-12 14:43:53 EAT	223186	25	61	25	65	5
223188	2021-04-12 14:43:59 EAT	223187	25	66	25	65	5
223189	2021-04-12 14:44:05 EAT	223188	25	62	25	65	5
223190	2021-04-12 14:44:11 EAT	223189	25	65	25	65	5
223191	2021-04-12 14:44:17 EAT	223190	25	67	25	65	5
223192	2021-04-12 14:44:23 EAT	223191	25	68	25	65	5
223193	2021-04-12 14:44:29 EAT	223192	25	64	25	65	5

Figure 15: Checking humidity of dry soil sample

To validate the soil sample humidity readings, the study used three soil samples randomly collected from three farms. The soil sample depicted in the image above is relatively dry and is considered soil sample 3. The readings next to it were downloaded from the online platform at the time of taking the picture and the humidity of the soil was at 65 %.

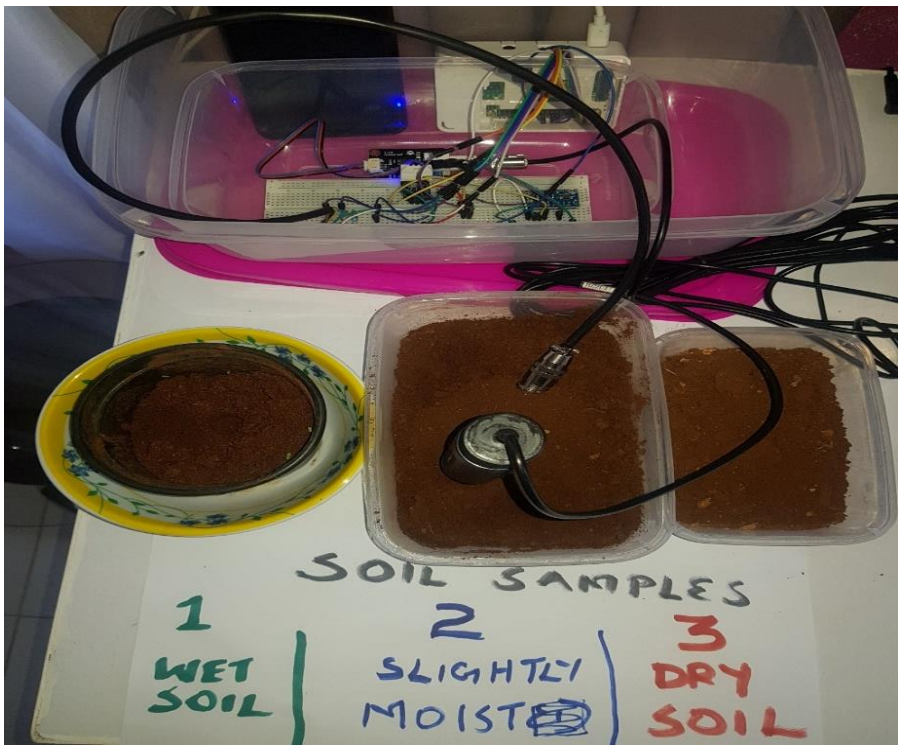

	A	B	C	D	E	F	G
1	created_at	entry_id no.	Ambient temperature	Ambient humidity in %	Soil temperature	Soil humidity	soil pH
223194	2021-04-12 14:44:35 EAT	223193	25	66	25	70	5
223195	2021-04-12 14:44:41 EAT	223194	25	69	25	77	6
223196	2021-04-12 14:44:47 EAT	223195	25	73	25	81	6
223197	2021-04-12 14:44:53 EAT	223196	25	73	25	82	6
223198	2021-04-12 14:44:59 EAT	223197	25	73	25	82	6
223199	2021-04-12 14:45:06 EAT	223198	25	73	25	83	7

Figure 16: Testing soil sample for slightly moist soil sample

When the sensor SHT10 was inserted into the soil sample on figure above, the moisture content values (readings) increased from 65 to 70. When sprayed with a mist spray the humidity kept increasing up to 83. Please note, the soil pH also changed as the water mist was sprayed at close proximity.

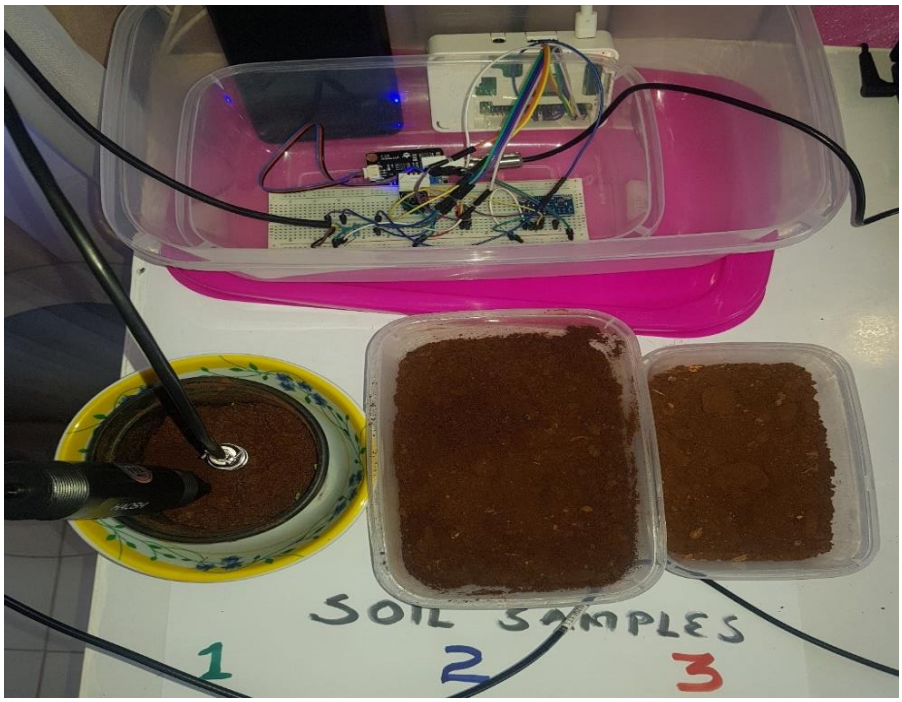

1	created_at	entry_id no.	Ambient temperature	Ambient humidity in %	Soil temperature	Soil humidity	soil pH
223200	2021-04-12 14:45:12 EAT	223199	25	73	24	82	7
223201	2021-04-12 14:45:18 EAT	223200	25	73	24	83	7
223202	2021-04-12 14:45:24 EAT	223201	25	73	24	84	7
223203	2021-04-12 14:45:30 EAT	223202	25	83	24	85	7
223204	2021-04-12 14:45:36 EAT	223203	25	73	24	85	7
223205	2021-04-12 14:45:42 EAT	223204	25	74	24	86	7
223206	2021-04-12 14:45:48 EAT	223205	25	77	24	86	7
223207	2021-04-12 14:45:55 EAT	223206	25	77	24	86	7
223208	2021-04-12 14:46:01 EAT	223207	25	73	24	86	7
223209	2021-04-12 14:46:07 EAT	223208	25	74	24	87	7
223210	2021-04-12 14:46:13 EAT	223209	25	74	24	87	7
223211	2021-04-12 14:46:19 EAT	223210	25	77	24	87	7
223212	2021-04-12 14:46:25 EAT	223211	25	86	24	87	7
223213	2021-04-12 14:46:31 EAT	223212	25	68	24	87	7
223214	2021-04-12 14:46:37 EAT	223213	25	66	24	87	7

Figure 17: Testing soil sample for wet soil

The Fig. 17 shows the probe and SHT10 inserted into soil sample 1, which is wet soil. The pH changes to 7 and the soil humidity increases to 87. It is important to note that as the two sensors were moved, the DHT22 stayed at the same location and hence the readings remain steady at 25 ^{0}C.

Analysis of sensor operation shows that the h-101 pH electrode operates between 0 to 60 ^{0}C, however the ideal temperature is 25 ^{0}C and has a response time of ±10 seconds. The input from the probe is in millivolts (mV) which is then converted using the matrix in Table 3.

Table 3: pH probe conversion from mV to pH

VOLTAGE (mV)	pH value	VOLTAGE (mV)	pH value
414.12	0.00	-414.12	14.00
354.96	1.00	-354.96	13.00
295.80	2.00	-295.80	12.00
236.64	3.00	-236.64	11.00
177.48	4.00	-177.48	10.00
118.32	5.00	-118.32	9.00
59.16	6.00	-59.16	8.00
0.00	7.00	0.00	7.00

In this case 7 pH translates to 0 mV, while 0 pH translates to 414 mV and 14 pH is -414 mV. Every 24 hours, the pH drifts by ±0.02 pH. The output is linear.

The BNC connector allows for quick and easy connection to any pH/ORP meter or transmitter while the PTFE junction of the electrode has a unique clog resistant junction that enhances both probe life and accuracy and the double junction technology with gel polymer filling ensures long electrode life and reliability in harsh environments. The glass tip requires maintenance and is delicate.

In this study, the probe is connected via ADS 1115 using I2C and it has the following connections:

(i) SCL from ADS1115 to GPIO 3 (pin5)

(ii) SDA from ADS1115 to GPIO 2 (pin3)

(iii) VCC from pH BNC Connector to 5V (pin2)

(iv) Ground to ground

(v) Po from pH BNC connector to A0 on ADS1115

(vi) VDD from ADS1115 to 3.3V

The SHT10 functions at a range of -20 ^{0}C to 60 ^{0}C hence suitable for use in East African weather. The error/drift is ±4.5 %.It has four connections:

(i) Ground to ground

(ii) VCC to 3.3V

(iii) Data via a resistor (10K) to GPIO 23 or pin 16

(iv) SCL to GPIO 24 or pin 18

The DHT22 is connected via three pins:

(i) Ground to ground

(ii) VCC to 3.3V

(iii) Data pin to GPIO 25 (pin22)

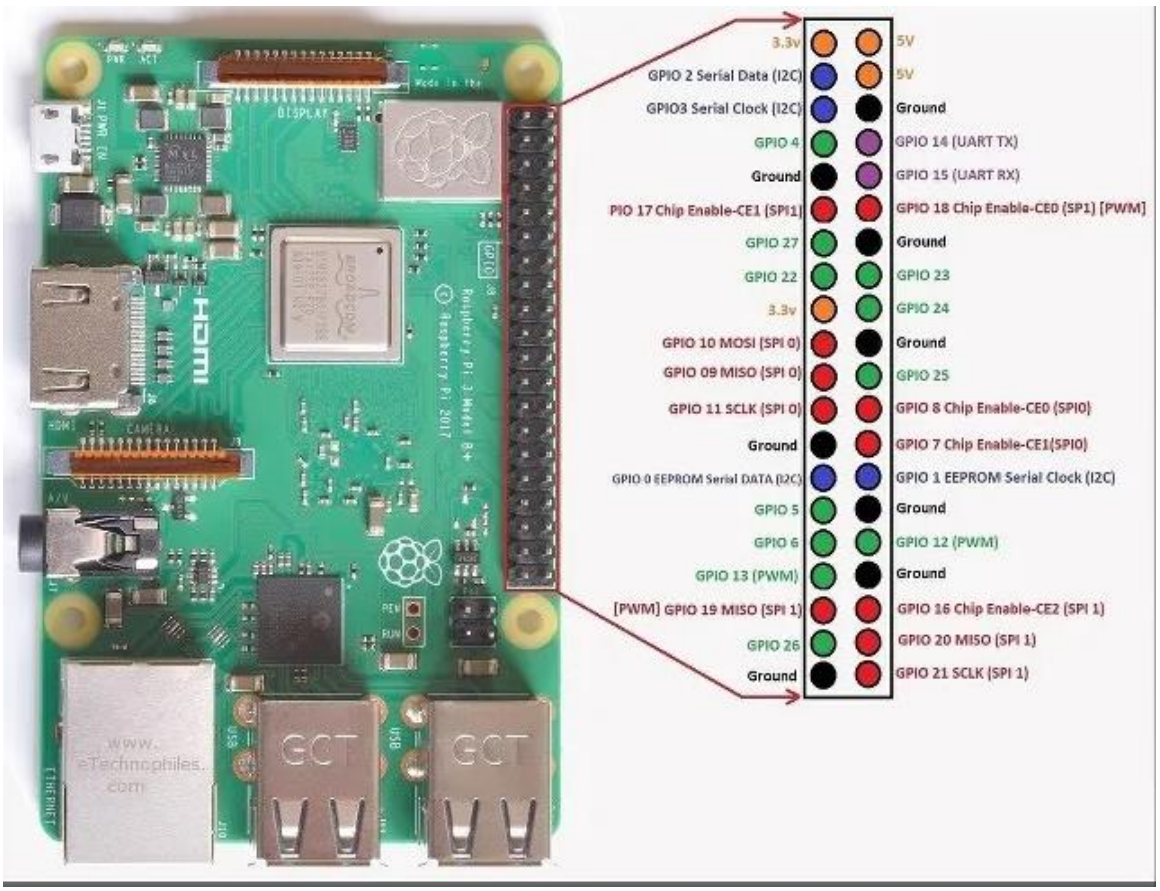

Figure 18: Raspberry pi GPIO pins labelled (eTechnophiles.com, 2021)

The Fig. 18 shows the connection points for a raspberry pi which are described in lists for the three sensors.

4.1.3 Results viewed online

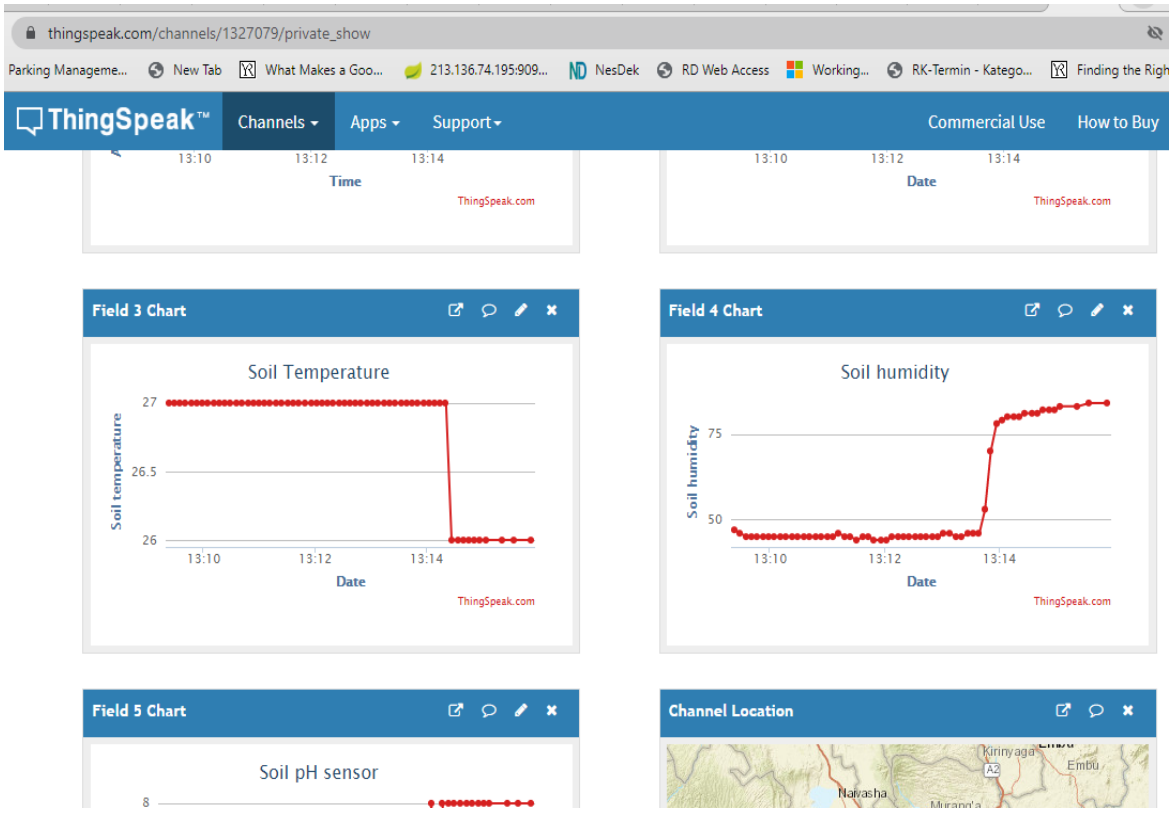

Figure 19: Online graphical interface and display

Figure 19 shows the result displayed on an online visual platform. This data is available via a public access channel: 1327079 on Thingspeak that can be accessed at https://thingspeak.com/channels/1327079.

The Fig. 20, Fig. 21 and Fig. 22 show the process to access the online platform with steps 1, 2 and 3.

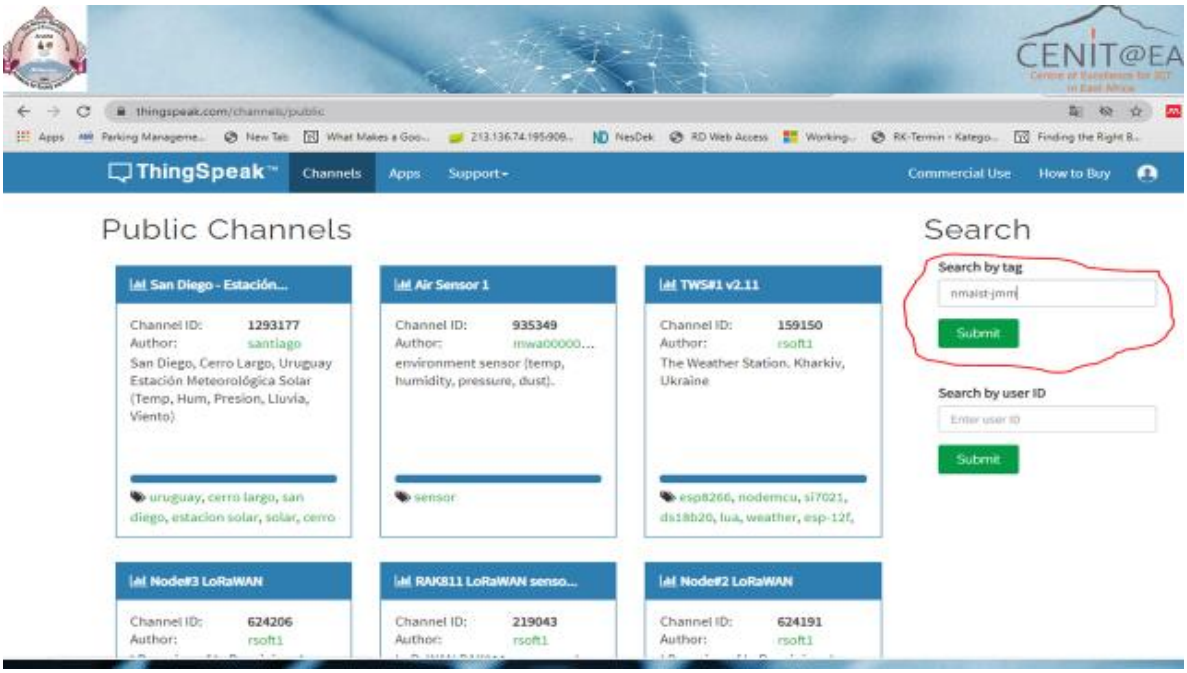

Figure 20: Accessing the online platform using a tag "nmaist-jmm" – step 1

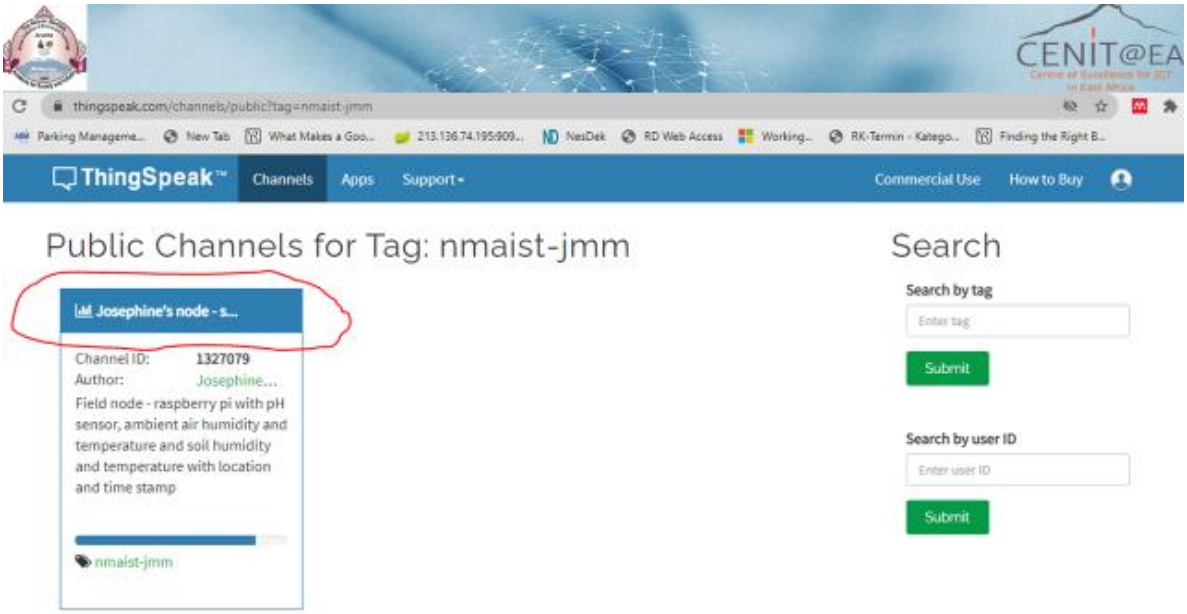

Figure 21: Accessing the online platform using a tag "nmaist-jmm" – step 2

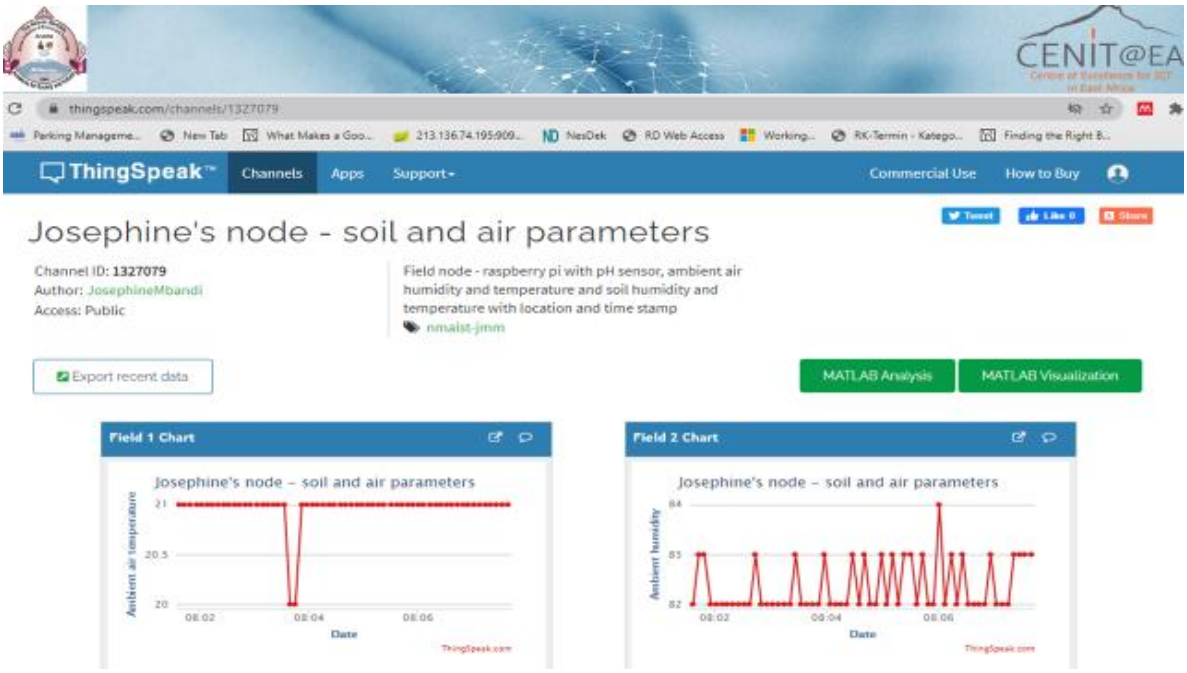

Figure 22: Accessing the online platform using a tag "nmaist-jmm" – step 3

The project also confirmed the availability of downloading of data for further analysis. One of the feeds downloaded is provided as shown in Fig. 24 and Fig. 25.

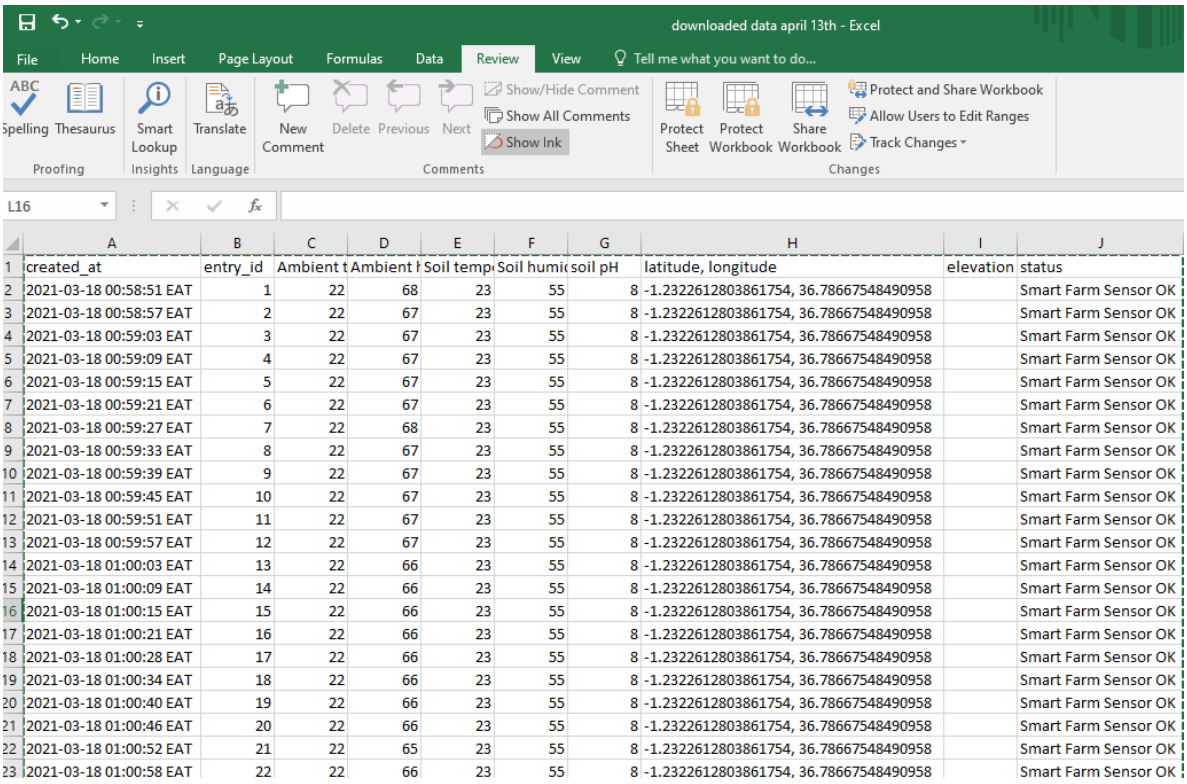

	A	B	C	D	E	F	G	H	I	J
1	created_at	entry_id	Ambient t	Ambient h	Soil tempi	Soil humi	soil pH	latitude, longitude	elevation	status
2	2021-03-18 00:58:51 EAT	1	22	68	23	55	8	-1.2322612803861754, 36.78667548490958		Smart Farm Sensor OK
3	2021-03-18 00:58:57 EAT	2	22	67	23	55	8	-1.2322612803861754, 36.78667548490958		Smart Farm Sensor OK
4	2021-03-18 00:59:03 EAT	3	22	67	23	55	8	-1.2322612803861754, 36.78667548490958		Smart Farm Sensor OK
5	2021-03-18 00:59:09 EAT	4	22	67	23	55	8	-1.2322612803861754, 36.78667548490958		Smart Farm Sensor OK
6	2021-03-18 00:59:15 EAT	5	22	67	23	55	8	-1.2322612803861754, 36.78667548490958		Smart Farm Sensor OK
7	2021-03-18 00:59:21 EAT	6	22	67	23	55	8	-1.2322612803861754, 36.78667548490958		Smart Farm Sensor OK
8	2021-03-18 00:59:27 EAT	7	22	68	23	55	8	-1.2322612803861754, 36.78667548490958		Smart Farm Sensor OK
9	2021-03-18 00:59:33 EAT	8	22	67	23	55	8	-1.2322612803861754, 36.78667548490958		Smart Farm Sensor OK
10	2021-03-18 00:59:39 EAT	9	22	67	23	55	8	-1.2322612803861754, 36.78667548490958		Smart Farm Sensor OK
11	2021-03-18 00:59:45 EAT	10	22	67	23	55	8	-1.2322612803861754, 36.78667548490958		Smart Farm Sensor OK
12	2021-03-18 00:59:51 EAT	11	22	67	23	55	8	-1.2322612803861754, 36.78667548490958		Smart Farm Sensor OK
13	2021-03-18 00:59:57 EAT	12	22	67	23	55	8	-1.2322612803861754, 36.78667548490958		Smart Farm Sensor OK
14	2021-03-18 01:00:03 EAT	13	22	66	23	55	8	-1.2322612803861754, 36.78667548490958		Smart Farm Sensor OK
15	2021-03-18 01:00:09 EAT	14	22	66	23	55	8	-1.2322612803861754, 36.78667548490958		Smart Farm Sensor OK
16	2021-03-18 01:00:15 EAT	15	22	66	23	55	8	-1.2322612803861754, 36.78667548490958		Smart Farm Sensor OK
17	2021-03-18 01:00:21 EAT	16	22	66	23	55	8	-1.2322612803861754, 36.78667548490958		Smart Farm Sensor OK
18	2021-03-18 01:00:28 EAT	17	22	66	23	55	8	-1.2322612803861754, 36.78667548490958		Smart Farm Sensor OK
19	2021-03-18 01:00:34 EAT	18	22	66	23	55	8	-1.2322612803861754, 36.78667548490958		Smart Farm Sensor OK
20	2021-03-18 01:00:40 EAT	19	22	66	23	55	8	-1.2322612803861754, 36.78667548490958		Smart Farm Sensor OK
21	2021-03-18 01:00:46 EAT	20	22	66	23	55	8	-1.2322612803861754, 36.78667548490958		Smart Farm Sensor OK
22	2021-03-18 01:00:52 EAT	21	22	65	23	55	8	-1.2322612803861754, 36.78667548490958		Smart Farm Sensor OK
23	2021-03-18 01:00:58 EAT	22	22	66	23	55	8	-1.2322612803861754, 36.78667548490958		Smart Farm Sensor OK

Figure 23: Downloaded data from Thingspeak in excel

created_at	entry_id	Ambient t	Ambient h	Soil temp	Soil humi	soil pH	latitude, longitude	elevation	status
2021-03-18 00:58:51 EAT	1	22	68	23	55	8	-1.2322612803861754, 36.78667548490958		Smart Farm Sensor OK
2021-03-18 00:58:57 EAT	2	22	67	23	55	8	-1.2322612803861754, 36.78667548490958		Smart Farm Sensor OK
2021-03-18 00:59:03 EAT	3	22	67	23	55	8	-1.2322612803861754, 36.78667548490958		Smart Farm Sensor OK
2021-03-18 00:59:09 EAT	4	22	67	23	55	8	-1.2322612803861754, 36.78667548490958		Smart Farm Sensor OK
2021-03-18 00:59:15 EAT	5	22	67	23	55	8	-1.2322612803861754, 36.78667548490958		Smart Farm Sensor OK
2021-03-18 00:59:21 EAT	6	22	67	23	55	8	-1.2322612803861754, 36.78667548490958		Smart Farm Sensor OK
2021-03-18 00:59:27 EAT	7	22	68	23	55	8	-1.2322612803861754, 36.78667548490958		Smart Farm Sensor OK
2021-03-18 00:59:33 EAT	8	22	67	23	55	8	-1.2322612803861754, 36.78667548490958		Smart Farm Sensor OK
2021-03-18 00:59:39 EAT	9	22	67	23	55	8	-1.2322612803861754, 36.78667548490958		Smart Farm Sensor OK
2021-03-18 00:59:45 EAT	10	22	67	23	55	8	-1.2322612803861754, 36.78667548490958		Smart Farm Sensor OK
2021-03-18 00:59:51 EAT	11	22	67	23	55	8	-1.2322612803861754, 36.78667548490958		Smart Farm Sensor OK
2021-03-18 00:59:57 EAT	12	22	67	23	55	8	-1.2322612803861754, 36.78667548490958		Smart Farm Sensor OK
2021-03-18 01:00:03 EAT	13	22	66	23	55	8	-1.2322612803861754, 36.78667548490958		Smart Farm Sensor OK
2021-03-18 01:00:09 EAT	14	22	66	23	55	8	-1.2322612803861754, 36.78667548490958		Smart Farm Sensor OK
2021-03-18 01:00:15 EAT	15	22	66	23	55	8	-1.2322612803861754, 36.78667548490958		Smart Farm Sensor OK
2021-03-18 01:00:21 EAT	16	22	66	23	55	8	-1.2322612803861754, 36.78667548490958		Smart Farm Sensor OK
2021-03-18 01:00:28 EAT	17	22	66	23	55	8	-1.2322612803861754, 36.78667548490958		Smart Farm Sensor OK
2021-03-18 01:00:34 EAT	18	22	66	23	55	8	-1.2322612803861754, 36.78667548490958		Smart Farm Sensor OK
2021-03-18 01:00:40 EAT	19	22	66	23	55	8	-1.2322612803861754, 36.78667548490958		Smart Farm Sensor OK
2021-03-18 01:00:46 EAT	20	22	66	23	55	8	-1.2322612803861754, 36.78667548490958		Smart Farm Sensor OK
2021-03-18 01:00:52 EAT	21	22	65	23	55	8	-1.2322612803861754, 36.78667548490958		Smart Farm Sensor OK
2021-03-18 01:00:58 EAT	22	22	66	23	55	8	-1.2322612803861754, 36.78667548490958		Smart Farm Sensor OK

Figure 24: Results downloaded into excel for further manipulation

4.1.4 Output from the online platform

The downloaded data can be form of Comma Separated Version (CSV), JavaScript Object Notation (JSON) or Extensible Markup Language (XML). In all three forms the data can then be further used for manipulation and third party applications.

This system provides a compact solution for real-time data collection which is then compared to lab soil samples. It provides information that is needed at farm level in real-time in a low-cost manner.

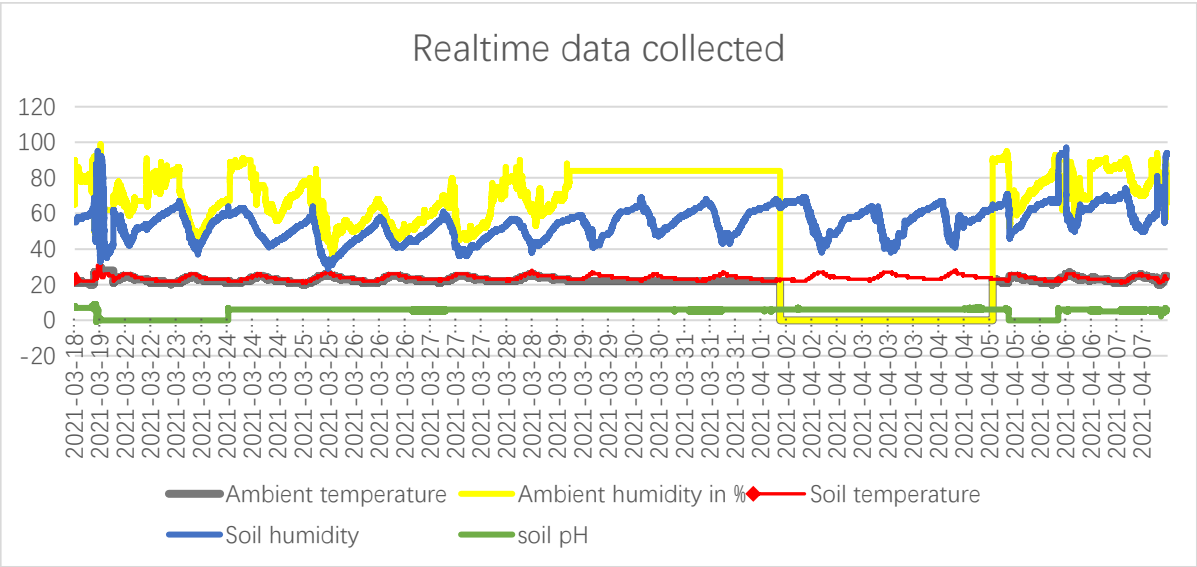

Figure 25: Real-time data collected from test node

From the raw data shown of Fig. 26, the study had the pH sensor calibrated. This was done between 18th and 24th March, 2021. Also the DHT22 sensor was switched off between the 1st and 5th April 2021 to ascertain parallel working of the sensors.

The soil temperature and the ambient air temperature readings were in sync throughout the test period. The ambient humidity and soil humidity in the first half of the days were changing harmoniously, this changed later as the study adjusted the soil samples to have some with high moisture content and some that were dry.

4.2 Discussion

The study produced Prototype 1 based on the initial proposal. This Prototype had connectivity breakdowns and the data received at the output was inconsistent. The Prototype 1 required two networks to operate, being, the local network and the global network. This resulted in delays in delivery of information to the centralised node.

In order to improve on the usability of the initial design, the study produced an improved Prototype. Prototype 2 eliminated the problems of information delay by incorporating the end node together with the central node. In addition, the global and local network was changed. This Prototype used I2C as a local network which improved the consistency of data shared within the node. The study also changed from the use of GSM modules to use of WiFi network for the global network. The result was consistency and availability of output data.

Visualization online was done using Thingspeak and it was possible to view data in an informative way instantaneously. The visual results online show information in a graphical representation. This allows for all stakeholders with access to internet to see each end node and the data it collects. Real-time visualization supports the work iSDA is doing to provide information in a timely manner to all concerned.

Finally, the data collected from each node and shared onto a central platform is stored in CSV and PDF formats. This allows for the same to be downloaded and used later for further manipulation.

CHAPTER FIVE

CONCLUSION AND RECOMMENDATIONS

5.1 Conclusion

Low cost sensors are reasonably priced as compared to reference grade equipment and provide a real-time solution for measurement of physical qualities of soil hence enabling farmers to make necessary and more appropriate decisions during the various crop stages. Low cost sensors have a shorter lifespan due to the drifting effect, operating field conditions like temperature and wind as well as power provision.

This study achieved the set out objectives as it adds value for lab based soil testing. The study set out to develop an effective supportive system for the iSDA project that collects real-time soil parameter data. This was achieved as the minimum viable product is able to collect real-time data and display it on a public online channel that can be accessed globally. The specific study objectives included firstly, the requirements analysis for design of the proposed system, secondly, to design and develop and test the proposed system and thirdly to validate the system and evaluate impact of the embedded system for iSDA project. This was achieved as explained in methodology using iterative semi-formal inteviews with the soil analysis team members, farmers and extension officers. The validation was done with the soil analysis lab staff and it was found to provide collaborative data for the iSDA project as sample soils taken to the lab can have an external unit placed in the farm of origin that continuously provides physical parameters of the said values.

Once the system has been calibrated correctly, it can serve the community for four to five years. The study brings on board real-time data relaying of farm parameters that make it easier for small scale farm owners, extension officers, soil labs and other stakeholders to make instant informed decisions.

5.2 Recommendations

During the study, which was the end of the year 2019 and half of the year 2020, the world was plagued with a pandemic covid-19 (Himmelfarb & Baptiste, 2020). Interaction during verification and validation was not as extensive as expected. This study scoped and was limited to working on a prototype providing for three sensors that assist in information towards physical soil parameters necessary for crop germination and growth i.e. temperature, moisture and soil

alkalinity/acidity. More sensors could be used to determine other chemical parameters that are used in soil testing.

Future work of the proposed system may consider a more compact development board for commercialization of the system. Another aspect does include the possible addition of scalable modules like access of the system from mobile devices via an android application or via use of Unstructured Supplementary Service Data (USSD) code.

REFERENCES

Adamides, G. (2020). A Review of Climate-Smart Agriculture Applications in Cyprus. *Atmosphere*, 11(9), 1-15. https://doi.org/10.3390/atmos11090898

Ashton, S. (2008). Wireless sensor networks. *World Energy Engineering Congress, 2008*, 4, 1853–1887. www.ijert.org

Bach, H., & Mauser, W. (2018). Sustainable Agriculture and Smart Farming. *Earth Observation Open Science and Innovation*, 1, 261–269. https://doi.org/10.1007/978-3-319-65633-5_12

Bünemann, E. K., Bongiorno, G., Bai, Z., Creamer, R. E., De Deyn, G., De Goede, R., Fleskens, L., Geissen, V., Kuyper, T. W., Mäder, P., Pulleman, M., Sukkel, W., Van Groenigen, J. W., & Brussaard, L. (2018). Soil quality: A critical review. *Soil Biology and Biochemistry*, 120, 105–125. https://doi.org/10.1016/j.s oilbio.2018.01.030

Camburn, B., Viswanathan, V., Linsey, J., Anderson, D., Jensen, D., Crawford, R., Otto, K., & Wood, K. (2017). Design prototyping methods: State of the art in strategies, techniques, and guidelines. *Design Science*, 3(2), 23-25. https://doi.org/10.1017/dsj.2017.10

Carlos-Mancilla, M., López-Mellado, E., & Siller, M. (2016). Wireless sensor networks formation: Approaches and techniques. *Journal of Sensors*, 2, 4-5. https://doi.org/10 .1155/2016/2081902

Contributors, T. G. (2021). *Home | Geany*. https://www.geany.org/

Dennison, H. C. R., & Baptiste, D. (2020). Coronavirus Disease (COVID-19). *Journal of Cardiovascular Nursing*, 35(4), 318–321. https:// doi. org/10. 1097/jcn. 0 000000000000710

EAC. (2019). *EAC Partner States*. https://www.eac.int/eac-partner-states

Encyclopedia. (2010). *About Encyclopedia*. https://encyclopedia.pub/about

eTechnophiles.com. (2021). *Raspberry Pi 3 B+ Pinout with GPIO functions, Schematic and Specs in detail*. https://www.etechnophiles.com/raspberry-pi-3-b-pinout-with-gpio-functions-schematic-and-specs-in-detail/

Food and Agriculture Organization of the United Nations. (1980). *Soil and plant testing and analysis*. *FAO Soils Bulletin No. 38/1*. https www.google.com.

Food and Agriculture Organization of the United Nations. (2018). *FAO in Kenya. FAO in Kenya* (*FAO-Kenya*). FAO Kenya. http://www.fao.org/kenya/fao-in-kenya/kenya-at-a-glance/en/

Fritzing. (2019). *Fritzing*. https://fritzing.org/

Patil, H. (2003). *Wireless Sensor Networks An Overview*. https://www. sciencedir ect.com/topics/computer-science/wireless-sensor-networks

Hickman, N., & Jonathan, A. (2021). *What is smart agriculture and why smart agruculture is the future? | ONDO*. https://ondo.io/what_is_smart_agriculture/

ICRAF. (2018). *Innovative Solutions for Decision Agriculture (iSDA) | World Agroforestry | Transforming Lives and Landscapes with Trees*. http://www.worldagroforestry. org/project/innovative-solutions-decision-agriculture-isda

Lado, C. (1998). The transfer of agricultural technology and the development of small-scale farming in rural Africa: Case studies from Ghana, Sudan, Uganda, Zambia and South Africa. *GeoJournal*, *45*(3), 165–176. https://doi.org/10.1023/A:1006931320926

Mukhopadhyay, D. (2020). Soil Analysis: A Relook and Way Forward. *Soil Analysis: Recent Trends and Applications*, 1, 1–18. Springer, Singapore. https://doi.org/10.1 007/97 8-981-15-2039-6_1

Neina, D. (2019a). The Role of Soil pH in Plant Nutrition and Soil Remediation. *Applied and Environmental Soil Science*, 2019, 1-9. https://doi.org/10.1155/2019/5794869

Otto, K. N., & Ho, C. M. (1996). Modeling manufacturing quality constraints for product development. *Concurrent Engineering Research and Applications*, *4*(4), 333–346. https:// doi.org/10.1177/1063293X9600400403

Senagi, K., Jouandeau, N., & Kamoni, P. (2017). Hungarian Association of Agricultural Informatics European Federation for Information Technology in Agriculture. *Food and the Environment Journal of Agricultural Informatics*, 8(3), 23–32. https://doi.org/10.17 700/jai.2017.8.3.390

Sethi, P., & Sarangi, S. R. (2017). Internet of Things: Architectures, Protocols, and Applications. *Journal of Electrical and Computer Engineering*, 1, 1234-1241. https://doi.org/10.1155/2017/9324035

Shimoda, A., & Yaguchi, K. (2017). *A Method of Setting the Order of User Story Development of an Agile-Waterfall Hybrid Method by Focusing on Common Objects. Proceedings - 2017 6th IIAI International Congress on Advanced Applied Informatics. IIAI-AAI* 20, 301–306. https://doi.org/10.1109/IIAI-AAI.2017.149

Takoutsing, B., Weber, J., Aynekulu, E., Rodríguez, M. J. A., Shepherd, K., Sila, A., Tchoundjeu, Z., & Diby, L. (2016). Assessment of soil health indicators for sustainable production of maize in smallholder farming systems in the highlands of Cameroon. *Geoderma*, 276, 64–73. https://doi.org/10.1016/j.geoderma.2016.04.027

Tillett, N. D. (1995). Robots and food: Low margins need different solutions. *Industrial Robot*, 22(5), 15–17. https://doi.org/10.1108/01439919510104094

Transtutors.com. (2020). *(Solved) - MITS5003 Wireless Networks and Communication Case study 1 Wireless Transtutors Transtutors*. https://www.transtutors.com/questions/m its 5003-wireless-networks-and-communication-case-study-1-wireless-sensor-network-ws-2767013.htm

Wang, L., Chen, Z., Zhou, Q., Liu, J., Ren, J., Huang, Q., Deng, H., Zhang, L., & Li, D. (2011). *Charms - China Agricultural Remote Sensing Monitoring System: Conference Publication*, 3, 3530-3533. https://doi: 10.1109/IGARSS.2011 .6049983.

WorldBank. (2019). *Tanzania's Agriculture Sector Offers Fresh Opportunities for Accelerated Poverty Reduction*. https:// www. worldbank. org/en/ news/ press-release/ 2019/12/03/ tanzanias-agriculture-sector-offers-fresh-opportunities-for-accelerated-poverty-reduction

APPENDICES

Appendix 1: Data sheet – h-101 pH electrode

Data sheet - H-101 pH electrode (pH sensor)

i. Length (with protective cover) : 17.7cm(6.97")
ii. Diameter : 2.74cm(1.08")
iii. Wire Length : 5m(196.85")
iv. Connector : BNC
v. Measuring Range : 0-14pH
vi. Measuring Precision: ≦0.02pH
vii. Suitable Temperature: 0-60℃
viii. Response Time:10sec
ix. Drift : ≦0.02PH/24hours
x. Resistance of Sensitive Membrane: ≦200*106Ω
xi. Slope: ≧95 %
xii. Electrode's Equipotential Point:7±0.5PH
xiii. @ 7Ph: OmV, 0Ph: 414mV, 14Ph: -414mV

VOLTAGE (mV)	pH value	VOLTAGE (mV)	pH value
414.12	0.00	-414.12	14.00
354.96	1.00	-354.96	13.00
295.80	2.00	-295.80	12.00
236.64	3.00	-236.64	11.00
177.48	4.00	-177.48	10.00
118.32	5.00	-118.32	9.00
59.16	6.00	-59.16	8.00
0.00	7.00	0.00	7.00

Appendix 2: Data sheet – SHT1x

Sensor Performance

Relative Humidity

Parameter	Condition	min	typ	max	Units
Resolution [1]		0.4	0.05	0.05	%RH
		8	12	12	bit
Accuracy [2] SHT10	typical		±4.5		%RH
	maximal	see Figure 2			
Accuracy [2] SHT11	typical		±3.0		%RH
	maximal	see Figure 2			
Accuracy [2] SHT15	typical		±2.0		%RH
	maximal	see Figure 2			
Repeatability			±0.1		%RH
Replacement		fully interchangeable			
Hysteresis			±1		%RH
Nonlinearity	raw data		±3		%RH
	linearized		<<1		%RH
Response time [3]	τ (63%)		8		s
Operating Range		0		100	%RH
Long term drift [4]	normal		< 0.5		%RH/yr

Temperature

Parameter	Condition	min	typ	max	Units
Resolution [1]		0.04	0.01	0.01	°C
		12	14	14	bit
Accuracy [2] SHT10	typical		±0.5		°C
	maximal	see Figure 3			
Accuracy [2] SHT11	typical		±0.4		°C
	maximal	see Figure 3			
Accuracy [2] SHT15	typical		±0.3		°C
	maximal	see Figure 3			
Repeatability			±0.1		°C
Replacement		fully interchangeable			
Operating Range		-40		123.8	°C
		-40		254.9	°F
Response Time [6]	τ (63%)	5		30	s
Long term drift			< 0.04		°C/yr

Appendix 3: Data sheet – DHT22

Model	DHT22
Power supply	3.3-6V DC
Output signal	digital signal via single-bus
Sensing element	Polymer capacitor
Operating range	humidity 0-100%RH; temperature -40~80Celsius
Accuracy	humidity +-2%RH(Max +-5%RH); temperature <+-0.5Celsius
Resolution or sensitivity	humidity 0.1%RH; temperature 0.1Celsius
Repeatability	humidity +-1%RH; temperature +-0.2Celsius
Humidity hysteresis	+-0.3%RH
Long-term Stability	+-0.5%RH/year
Sensing period	Average: 2s
Interchangeability	fully interchangeable
Dimensions	small size 14*18*5.5mm; big size 22*28*5mm

Appendix 4: System C code for calibration pH meter on Arduino UNO

```
/*
Once uploaded, open the serial monitor, set the baud rate to 9600 and append "Carriage
return"
The code allows the user to observe real time pH readings as well as calibrate the sensor.
One, two or three-point calibration can be done.
Calibration commands:
 low-point: "cal,4"
 mid-point: "cal,7"
 high-point: "cal,10"
 clear calibration: "cal,clear"
*/
#include "ph_grav.h"                                    //header file for Atlas Scientific
gravity pH sensor
#include "LiquidCrystal.h"                              //header file for liquid crystal
display (lcd)
String inputstring = "";                                //a string to hold incoming data
from the PC
boolean input_string_complete = false;                  //a flag to indicate have we
received all the data from the PC
char inputstring_array[10];                             //a char array needed for string
parsing
Gravity_pH pH = A0;                                     //assign analog pin A0 of
Arduino to class Gravity_pH. connect output of pH sensor to pin A0
LiquidCrystal pH_lcd(2, 3, 4, 5, 6, 7);                 //make a variable pH_lcd and assign
arduino digital pins to lcd pins (2 -> RS, 3 -> E, 4 to 7 -> D4 to D7)
void setup() {
  Serial.begin(9600);                                   //enable serial port
  pH_lcd.begin(20, 4);                                  //start lcd interface and define lcd
size (20 columns and 4 rows)
  pH_lcd.setCursor(0,0);                                //place cursor on screen at column
1, row 1
  pH_lcd.print("--------------------");                //display characters
  pH_lcd.setCursor(0,3);                                //place cursor on screen at column
1, row 4
  pH_lcd.print("--------------------");                //display characters
  pH_lcd.setCursor(5, 1);                               //place cursor on screen at column
6, row 2
  pH_lcd.print("pH Reading");                           //display "pH Reading"
  if (pH.begin()) { Serial.println("Loaded EEPROM");}
```

```
  Serial.println(F("Use commands \"CAL,4\", \"CAL,7\", and \"CAL,10\" to calibrate
the circuit to those respective values"));
  Serial.println(F("Use command \"CAL,CLEAR\" to clear the calibration"));
 }
void loop() {

  if (input_string_complete == true) {                    //check if data received
    inputstring.toCharArray(inputstring_array, 30);     //convert the string to a char
array
    parse_cmd(inputstring_array);                          //send data to pars_cmd function
    input_string_complete = false;                         //reset the flag used to tell if we
have received a completed string from the PC
    inputstring = "";                                      //clear the string
  }
  Serial.println(pH.read_ph());                              //output pH reading to serial
monitor
  pH_lcd.setCursor(8, 2);                                  //place cursor on screen at column
9, row 3
  pH_lcd.print(pH.read_ph());                                //output pH to lcd
  delay(1000);
}
void serialEvent() {                                         //if the hardware serial port_0
receives a char
  inputstring = Serial.readStringUntil(13);                  //read the string until we see a
<CR>
  input_string_complete = true;                            //set the flag used to tell if we have
received a completed string from the PC
}

void parse_cmd(char* string) {                             //For calling calibration functions
  strupr(string);                                          //convert input string to uppercase

  if (strcmp(string, "CAL,4") == 0) {                      //compare user input string with
CAL,4 and if they match, proceed
    pH.cal_low();                                            //call function for low point
calibration
    Serial.println("LOW CALIBRATED");
  }
  else if (strcmp(string, "CAL,7") == 0) {                 //compare user input string with
CAL,7 and if they match, proceed
```

```
    pH.cal_mid();                                          //call function for midpoint
calibration
    Serial.println("MID CALIBRATED");
  }
  else if (strcmp(string, "CAL,10") == 0) {            //compare user input string with
CAL,10 and if they match, proceed
    pH.cal_high();                                         //call function for highpoint
calibration
    Serial.println("HIGH CALIBRATED");
  }
  else if (strcmp(string, "CAL,CLEAR") == 0) {        //compare user input string with
CAL,CLEAR and if they match, proceed
    pH.cal_clear();                                         //call function for clearing
calibration
    Serial.println("CALIBRATION CLEARED");
  }
}
```

Appendix 5: Sensors – C code for SHT1x, DHT22 and ADS1115

```
#include "SmartFarm.h"
#include <stdio.h>
#include <errno.h>
#include <stdlib.h>
#include <string.h>
#include <unistd.h>
int main(void)
{
	fd_set readfds;
	int activity,max_sd=0,ret;
	struct timeval timeout;
	struct tm *tm;
	time_t ltime;
	int ret_val = 0;
	time_t start_t, end_t;
	struct LIO *lio = (struct LIO *)malloc(sizeof(struct LIO));
	if(!lio)
	{
		exit(EXIT_FAILURE);
	}

	lio->lio_id = 10;
	strcpy(lio->lio_name,"ads1115");

	if(LIO_Init((void*)lio))
	{
		log_error("LIO_Init() failed");
		exit(EXIT_FAILURE);
	}
	lio->lio_id = 11;
	strcpy(lio->lio_name,"dht22");
	if(LIO_Init((void*)lio))
	{
		log_error("LIO_Init() failed");
		exit(EXIT_FAILURE);
	}
	lio->lio_id = 12;
	strcpy(lio->lio_name,"sht1x");
	if(LIO_Init((void*)lio))
```

```
    {
        log_error("LIO_Init() failed");
        exit(EXIT_FAILURE);
    }
    log_info("SmartFarm running");
    memset(lio->latitude,'\0',sizeof(lio->latitude));
    memset(lio->longitude,'\0',sizeof(lio->longitude));
    memset(lio->status,'\0',sizeof(lio->status));
    strcpy(lio->latitude,"-1.232540");
    strcpy(lio->longitude,"36.785994");
    strcpy(lio->status,"Smart Farm Sensor OK");
    time(&start_t);
    FD_ZERO(&readfds);
    FD_SET(max_sd, &readfds);
    while(true)
    {
        timeout.tv_sec = 5;
        timeout.tv_usec = 0;
        activity = select( max_sd +1, NULL , NULL , NULL , &timeout);
        if ((activity < 0) && (errno!=EINTR))
        {
            log_error("select() failed %d",activity);
            exit(EXIT_FAILURE);
        }

        ltime = time(NULL);
        if(ltime == -1)
        {
            log_error("The time() function failed");
            goto END;
        }
        tm = localtime(&ltime);
        if(tm == NULL)
        {
            log_error("The localtime() function failed");
            goto END;
        }
        memset(lio->timestamp,'\0',sizeof(lio->timestamp));
        strftime(lio->timestamp,sizeof(lio->timestamp),"%Y-%m-%d %T %z",tm);
        LIO_LD(lio,0,&ret);
        if(http_curl((void*)lio))
```

```
        {
            log_error("failed to post data");
            time(&end_t);
            if((end_t - start_t) >= 60*5)
            {
                time(&start_t);
            }
        }
    }
    END:
    return 0;
}
```

Appendix 6: Parts and specifications of a raspberry pi

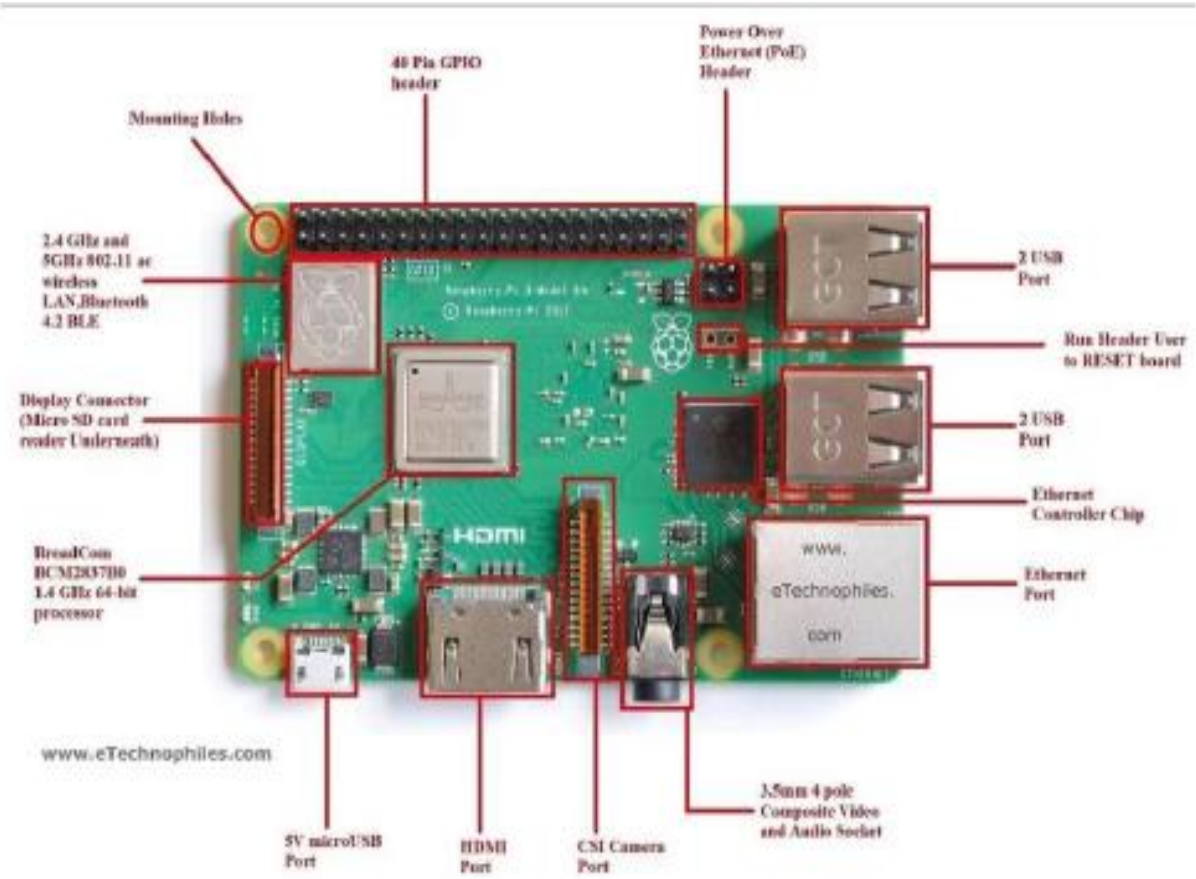

Processor: The BCM2837B0 processor is the main component of this tiny board that helps in carrying out a large set of instructions based on mathematical and logical formulas. BCM2837B0 is a 1.4GHz 64bit ARM quad-core Cortex A53 processor.
RAM: RAM used in R-Pi 3 B+ is 1GB LPDDR2 SDRAM (similar to the previous version)
GPU: It stands for graphics processing unit and is used for performing out the image calculation. The GPU uses OpenGL ES version 2.0, hardware-accelerated OpenVG API, and 1080p30 H.264 high-profile decode. It can provide up to 1Gpixel/s, 1.5Gtexel/s, or 24 GFLOPs of a general-purpose computer.
USB Ports: Similar to model B, model B+ also consists of 4 USB ports. Thus removing the hassle of connecting the USB hub in order to increase the ports.
Micro USB Power Source Connector: This connector is used for delivering 5V power to the board. It consumes approx. 170 to 200mA more power than model B. The power connector is also repositioned in the new B+ model and placed next to the HDMI socket.
HDMI and Composite Connection: Both the audio output socket and the video composite socket reside in a single 4-pole 3.5mm socket which is placed near the HDMI port, and now all the power and audio-video composite socket are placed on the one side of the board which gives it a clean and nice look.
USB Hard Drive: The board is capable of using an external USB hard drive.
PoE: B+ model comes with a facility of Power over Ethernet (PoE); a new feature added in this device which allows us to power the board using the ethernet cables.
Other Changes: The B+ version also comes with other improvements like the SD memory slot is replaced by a micro SD memory card slot (works similar to the previous version). The status LEDs on the board now only contain red and green colors and are relocated to the opposite end of the board.

Appendix 7: What pH stands for and the range

The unit that we use to measure the **acidity** of a substance is called **pH.** The term "H" is defined as the **negative log of the hydrogen ion concentration**. The range of pH can have values from 0 to 14. A pH value of 7 is neutral, as pure water has a pH value of exactly 7. Values lower than 7 are acidic and values greater than 7 are basic or alkaline.

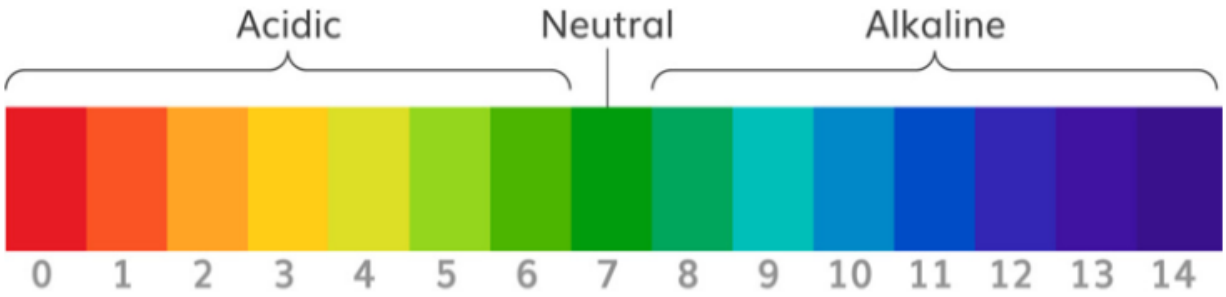

Appendix 8: Interview form used for requirements elicitation

NAME OF PERSON TO BE INTERVIEWED _____

LOCATION _____ DATE _____

CONTACT _____

_____

(OPTIONAL BUT IMPORTANT TO RELAY BACK OUTPUT OF THE RESEARCH)

AREA OF EXPERTISE _____

INTERACTION WITH SOIL SAMPLING _____

_____

_____

_____

REPORTING LINES _____

_____

_____

(ONLY RECORD REPORTS RELATED TO SOIL SAMPLING. E.G FREQUENCY, DATAIL, INTERNAL AND EXTERNAL COMMUNICATION OF THE SAME)

STAFF/COLEAGUES WORKING WITH AND/OR UNDER YOU _____

_____

_____

_____

(ONLY INFOMRATION RELATED TO RESPONSIBILITY TOWARDS THE SOIL SAMPLING PROCESSES)

FOR ISDA personnel.	FOR extension officers.	FOR Farmers
External communication in relation to sampled soils. (Frequency, platforms and feedback).	Communication to/from farmers and soil labs. The turnaround time/efficiency and gaps	Communication to/soil labs, extension officers and govt offices in relation to soil health and use of fertilizers
_____	_____	_____
_____	_____	_____
_____	_____	_____
_____	_____	_____
_____	_____	_____
_____	_____	_____
_____	_____	_____

Notes for Interviewer:

1. *Ascertain information available to the various groups considering timeliness, accuracy, usefulness and cost implications.*
2. *Identify areas of improvement.*
3. *Collect information on last season's fertilizers used and any rationalization to the choices by the farmers or suggestions by extension officers*

Poster Presentation

Soil data collection using Wireless Sensor Networks (WSN) and offsite visualization

Josephine Mbandi
Email: josephinebmandi@gmail.com

Introduction

Nearly 50 % of crop yield is attributed to the influence of climatic factors like: 1. Precipitation 2. Temperature 3. Atmospheric humidity 4. Solar radiation 5. Wind velocity 6. Atmospheric gases .

https://www.isda-africa.com/kenya

Technology has greatly contributed to maximized crop production in many ways and one of those ways is the use of Smart Agriculture - *the usage of technologies like Internet of Things(IoT), sensors, location systems, robots and artificial intelligence on your farm.*

IoT or IoE (Internet of Everything (IoE)) applied together with Wireless Sensor Networks (WSN) and has changed how we obtain and consume information.

The system presents a pilot remote sensor module in a WSN using a Raspberry Pi minicomputer as an end node and three sensors collecting information on soil humidity and temperature, air humidity and temperature and soil pH values in real-time. A cloud-based data analysis and visualization are used. The system supports the ongoing work by soil labs by collecting information that is close to real-time. The study brings on board real-time data relaying of farm parameters that make it easier for small scale farm owners, extension officers, soil labs and other stakeholders to make instant informed decisions.

Objectives

This study aimed to develop an effective supportive system for the iSDA (innovative Solutions for Digital Agriculture) project that collects real-time soil parameter data.

Methodology

The system was implemented using C language build on geany IDE and ThingSpeak is used for visualization of real-time results.

System description and operation

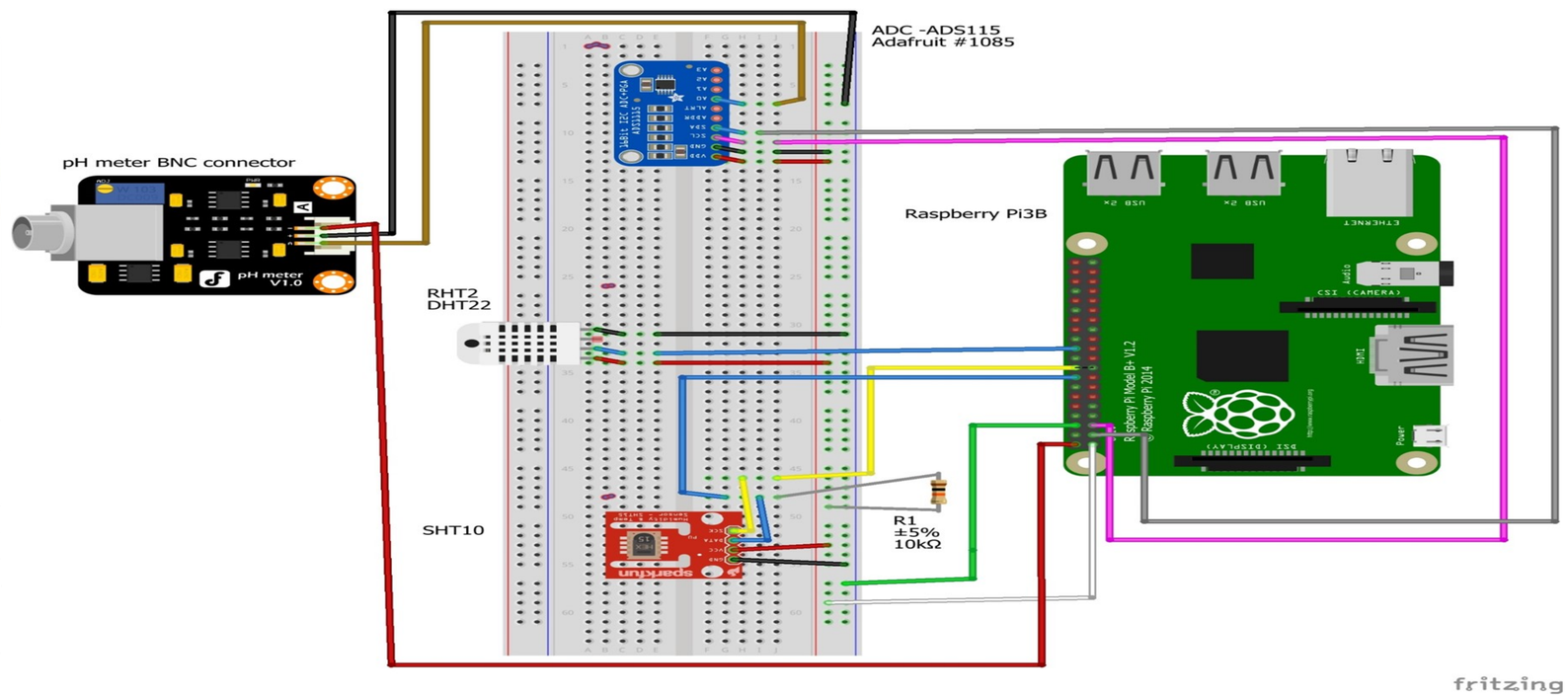

1.System Hardware connection Description. In this study, the probe is connected via ADS 1115 using I2C
2.The SHT10 functions at a range of -200C to 600C hence suitable for use in East African weather. The error/drift is ±4.5%.It has four connections
3.The DHT22 is connected via three pins

System description.

The three sensors collect signals from the soil and then these are converted into usable data, this data is then sent to Thingspeak and displayed on graphs as more user friendly information. The information can also be mined and used for further manipulation.

Conclusion.

The system supports the ongoing work by soil labs by collecting information that is close to real-time. The study brings on board real-time data relaying of farm parameters that make it easier for small scale farm owners, extension officers, soil labs and other stakeholders to make instant informed decisions.

In addition, the study was able to train school going pre-teens on embedded systems and soil conversation