The Nelson Mandela AFrican Institution of Science and Technology

NM-AIST Repository **https://dspace.mm-aist.ac.tz**

Computational and Communication Science Engineering Masters Theses and Dissertations [CoCSE]

2022-08

Automated uninterruptible power supply battery protector: case study of Tanzania atomic energy commission, Arusha-Tanz

Gurisi, Angelo

NM-AIST

https://doi.org/10.58694/20.500.12479/1575

Provided with love from The Nelson Mandela African Institution of Science and Technology

AUTOMATED UNINTERRUPTIBLE POWER SUPPLY BATTERY PROTECTOR: CASE STUDY OF TANZANIA ATOMIC ENERGY COMMISSION, ARUSHA-TANZANIA

Angelo Bidal Chance Gurisi

A Project Report Submitted in Partial Fulfilment of the Requirements for the Degree of Master of Science in Embedded and Mobile Systems of the Nelson Mandela African Institution of Science and Technology

Arusha, Tanzania

August, 2022

ABSTRACT

Uninterruptible Power Supply (UPS) is electrical apparatus that provides emergency power to its load when the input power source fails and manages power fluctuations through its battery during power failure to allow a user to save work and shut down a system procedurally. The UPS' electrical ability depends on its battery's strength. At Tanzania Atomic Energy Commission (TAEC) users mostly leave their UPS on as they go home, and when there is blackout, the UPS batteries get drained to zero leading to a significant number of UPS getting damaged in a year. Automated Uninterruptible Power Supply Battery Protector (AUPSBP) is developed to protect UPS battery at the institution using Kanban Agile methodology which supported teamwork. The AUPSBP monitors the voltage from mains to UPS using a voltage sensor. When the sensor detects a lack of voltage from the mains to UPS, AUPSBP triggers timer counting down towards switching the UPS off. When tested, AUPSBP switched off the UPS when the set time of 5 minutes elapsed, and when UPS battery voltage was <100V protecting UPS battery from draining to zero during blackout. It sent Short Messages using Global System for Mobile communication when mains power was switched off, and when UPS was switched off before the set time of 5 minutes elapsed. The AUPSBP is effective for switching off UPS before its battery drains to zero to prevent battery damage on different types and sizes of UPSs with only changes in switch and timer. Therefore, AUPSBP is needed to protect UPS at TAEC.

DECLARATION

I, Angelo Bidal Chance Gurisi do declare to the Senate of Nelson Mandela Africa Institution of Science and Technology that this Project report is my own original work and that it has neither been submitted nor being concurrently submitted for degree award in any other institution.

Angelo Bidal Chance Gurisi 01/08/2022

Name and Signature of Candidate Date

The Above declaration is confirmed by:

Dr. Devotha Nyambo 01/08/2022

Name and Signature of Supervisor 1 Date

Dr. Anael Sam 01/08/2022

Name and Signature of Supervisor 2 Date

COPYRIGHT

This project report is copyright material protected under the Berne Convention, the Copyright Act of 1999 other international and national enactments, in that behalf, on intellectual property. It must not be reproduced by any means, in full or in part, except for short extracts in their dealing, for researcher, private study, critical scholarly review or discourse with an acknowledgment, without the written permission of the office of Deputy Vice Chancellor for Academic, Research and Innovation on behalf of both the author and the Nelson Mandela African Institution of Science and Technology.

CERTIFICATION

The undersigned certify that have read and hereby recommend for acceptance by the Senate of the Nelson Mandela African Institution of Science and Technology, the Project Report titled *"Automated Uninterruptible Power Supply Battery Protector: Case Study of Tanzania Atomic Energy Commission, Arusha-Tanzania"* in Partial Fulfillment of the Requirements for the award of the degree of Master of Science in Embedded and Mobile Systems of the Nelson Mandela African Institution of Science and Technology.

Dr. Devotha Nyambo 01/08/2022

Name and Signature of Supervisor 1 Date

Dr. Anael Sam 01/08/2022

Name and Signature of Supervisor 2 Date

ACKNOWLEDGMENTS

Firstly and foremost, I would like to thank the Almighty God for his grace and abundant blessings throughout the development of this project report to its successful final stage.

Secondly, I would like to thank my supervisors: Dr. Devotha Nyambo and Dr. Anael Sam for their unwavering supervision support and mentorship from the start to the final stage of the project.

Thirdly, I would like to thank and express my deepest gratitude to the Nelson Mandela African Institute of Science and Technology (NM-AIST) and School of Computational and Communication Sciences and Engineering (CoCSE) for their facilities such as the labs which helped facilitate my project work.

Fourthly, I would like to thank my sponsor: The Center of Excellence for Information Communication Technology in East Africa (CENIT@EA).

Lastly, I am grateful to my family, colleagues, and friends for their encouragement and supports in various ways towards the success of the project.

DEDICATION

I dedicate this project report to my family and siblings for the moral supports they provided to me during my study.

TABLE OF CONTENTS

ABSTRACT i

DECLARATION ii

COPYRIGHT iii

CERTIFICATION iv

ACKNOWLEDGMENTS v

DEDICATION vi

TABLE OF CONTENTS vii

LIST OF TABLES ix

LIST OF FIGURES x

LIST OF APPENDICES xii

LIST OF ABBREVIATIONS AND SYMBOLS xiii

CHAPTER ONE 1

INTRODUCTION 1

1.1 Background of the Problem 1

1.2 Statement of the Problem 2

1.3 Rationale of the Project 2

1.4 Project Objectives 3

1.4.1 Main Objective 3

1.4.2 Specific Objectives 3

1.5 Project Questions 4

1.6 Significance of the Project 4

1.7 Delineation of the Project 5

CHAPTER TWO 6

LITERATURE REVIEW 6

2.1 Introduction 6

2.2 Literature on the uses of Uninterruptible Power Supply 7

2.3 Related Works on the Protection of Uninterruptible Power Supply Battery 8

2.4 The Identified Existing Gap in Uninterruptible Power Supply 9
2.5 Chapter Two Summary 10
CHAPTER THREE 11
MATERIALS AND METHODS 11
3.1 Overview 11
3.1.1 Kanban Agile Methodology 11
3.1.2 Why Kanban Agile? 14
3.2 The Study Area 14
3.3 Project Design 15
3.3.1 Target Population 15
3.3.2 Data Collection 15
3.3.3 System Requirement Analysis 16
3.4 System Design 24
3.5 Chapter Three Summary 31
CHAPTER FOUR 32
RESULTS AND DISCUSSION 32
4.1 Results 32
4.1.1 Integration and validation of the Automated Uninterruptable Power Supply Battery Protector with Uninterruptible Power Source 32
4.2 Discussion 42
CHAPTER FIVE 43
CONCLUSION AND RECOMMENDATIONS 43
5.1 Conclusion 43
5.2 Recommendations 43
REFERENCES 45
APPENDICES 47
POSTER PRESENTATION 57

LIST OF TABLES

Table 1: Required Hardware 17

Table 2: System Tests Results 32

LIST OF FIGURES

Figure 1: Project Flowchart using Agile Methodology (Drawing as per the Present Study).. 11

Figure 2: Development Flowchart of Kanban type of Agile Methodology (Nextupsolution) 13

Figure 3: Microchip ATmega328p 18

Figure 4: Printable Circuit Board 19

Figure 5: Organic Light Emitting Diode 19

Figure 6: Single Line Relay 19

Figure 7: Goble System for Mobile communication 20

Figure 8: Long Range (LoRa) 20

Figure 9: Power Supply 21

Figure 10: Servo Motor 21

Figure 11: Voltage Sensor VCC<25V 22

Figure 12: Current Sensor 22

Figure 13: Buzzer 23

Figure 14: Light Emitting Diode 23

Figure 15: Output Power Ports 24

Figure 16: System Flowchart 25

Figure 17: Main System Conceptual Diagram 26

Figure 18: Main System's Circuit 27

Figure 19: Hub System Conceptual Diagram 28

Figure 20: Hubystem Circuit 29

Figure 21: Block Diagram of the AUPSBP 30

Figure 22: Conceptual Diagram of Integrated AUPSBP with a UPS and a Load 31

Figure 23: A Block Diagram of AUPSBP, a UPS, a Load and a Mobile Phone 31

Figure 24: The Main System not Powered on 33

Figure 25: The Hub with both LoRa and GSM Modules Installed 33

Figure 26: Transformer added the Main System 35

Figure 27: Adding Power Output Component to the Main System 35

Figure 28: Servo Motor Integrated to the Main System 36

Figure 29: System being Connected to UPS 36

Figure 30: The Main System Mounted on the UPS 37

Figure 31: The Main System Mounted on the UPS with Servo Motor..... 37

Figure 32: Main System Connected to the UPS and the load During Testing..... 38

Figure 33: The Main System with UPS being Switched on with a Load 39

Figure 34: When the Power from the Mains goes off while Load is off 40

Figure 35: When the UPS goes off while there is no Power from the Mains 40

Figure 36: When Power from the Mains which Supplying UPS was Switched off 40

Figure 37: When UPS was Switched off Manually before the System's set Time..... 41

Figure 38: The complete Testing of the AUPSBP System 41

LIST OF APPENDICES

Appendix 1: Codes for AUPSBP Operation 47

Appendix 2: Codes for the Hub 51

Appendix 3: Out of use UPS due to Batter Damage 55

LIST OF ABBREVIATIONS AND SYMBOLS

AC	Alternating Current
AUPSBP	Automated Uninterruptible Power Supply Battery Protector
AVR	Automatic Voltage Regulator
CSS	Chirp Spread Spectrum Technology
DC	Direct Current
GSM	Global System for Mobile communication
IC	Integrated Circuits
ICT	Information and Communication Technology
IDE	Integrated Development Environment
ILC	Invensis Learning Company
IoT	Internet of Things
LCD	Liquid Crystal Display
LED	Light Emitting Diode
LoRa	Long Range
M2M	Machine to Machine Communication
OLED	Organic Light Emitting Diode
PCB	Printable Circuit Board
SMS	Short Messages
TAEC	Tanzania Atomic Energy Commission
TDMA	Time Division Multiple Access Technique
TS	Tanzania Shillings
UPS	Uninterruptible Power Supply
UPSs	Uninterruptible Power Supplies
VRLA	Valve Regulated Lead Acid

CHAPTER ONE

INTRODUCTION

1.1 Background of the Problem

An uninterruptible power supply or uninterruptible power source (UPS) is an electrical apparatus that provides emergency power to a load when the input power source or mains power fails. The UPS performs its functions by the use of batteries. Its batteries can range from a 9 volts battery to extremely large and costly battery systems. The UPS is situated between the main and an electronic device that needs to be protected from undesired features such as blackout, sags, surges that can occur within the power source through the supply to protect from a negative impact (Racine *et al*., 2005).

Power surges are abrupt short time increase in voltage, while sags are intermittent drops in voltage between 10% to 90% of the normal power supply and last for between half to a minute (Strods & Pecka, 2018). When sags last more than a short duration of one minute, they are generally referred to as power brown-out (Guerrero *et al.,* 2007). Power brown-out may be a planned event by an electrical utility that is reaching maximum capacity to prevent exceeding power supply or unplanned due to external forces (Racine *et al.,* 2005). The last power issue that UPS is designed for is a power blackout. Power blackout or outage occurs when there is a complete loss of power in a service area that affects many electricity users (Lahyani *et al.,* 2013). The UPS is designed to control the aforementioned issues using a Lead-Acid battery.

A normal Valve Regulated Lead Acid (VRLA) battery has a three to five year service life (Weber & Nasiri, 2016). However, a battery's life can be significantly shortened due to a variety of environmental, chemical and user-related issues (Hsiao *et al.,* 2014). These are the most common errors to avoid in order to get the maximum service life out of UPS battery because without a battery, UPS is nothing. So far, the most common known solution provided to prevent UPS battery from getting drained to zero level, is for the UPS to alerts the user to switch of the UPS through beeps. This solution is not efficient because when there is no one to switch off the UPS, for sure, its battery can be completely drained.

The battery is the heart of any working UPS and it has to be protected to reduce costs. Though UPS is cable of protecting other devices, it cannot protect its battery from getting drained to zero level in case of a longer power blackout. As such, this project was aimed to develop Automated Uninterruptable Power Supply Battery Protector (AUPSBP) to mitigate the challenge of UPS batter damage due to power drainage during power blackout.

The proposed and Developed AUPSBP could monitor the flow of voltage from mains to UPS. When AUPSBP detects zero voltage from mains to UPS using voltage sensor, it triggers timer to switch down the UPS based on the specified configured time. Each UPS can have different time for switching off depending on its capability to retain power and amount of load. For example, AUPSBP can monitor UPS battery which has an ability to retain power for one hour; also can be configured to shut down during power blackout after 45 minutes. In case the voltage runs low than 100 volts before the set time, AUPSBP can also shut the UPS to prevent battery from draining to zero level. The time set for switching off each UPS is determined by its battery's ability to retain power during power blackout. The AUPSBP can be used on different types and sizes of UPS because the part which carries the motor is adjustable. It can be increased to cater for a big UPS and can be reduced for a small UPS.

1.2 Statement of the Problem

At Tanzania Atomic Energy Commission (TAEC), it is noted that UPS batteries which are supposed to perform for three to five years are mostly getting damaged in a year or less than a half of their lifespan. Users frequently leave their UPS on when they return home, and when the power goes out, the UPS batteries are drained to zero in case of a lengthy power outage. To make the matter worse, when the users come back, they switch on their UPS and start using them right away without charging them first. Thus, the UPS batteries get damaged frequently, and as a result, increasing both the costs of maintaining and buying new UPS. Though there are new technologies coming up with better UPS, they are not yet available and extremely expensive. Moreover, leaving the existing UPS with the identified issues is a great loss. Therefore, the aforementioned UPS problem needs an adequate solution other than beeping and training technicians to maintain particular type of industrial UPS battery. The AUSPBP is a better independent technology to maintain the lifespan and reliability of industrial UPS battery. Thus the present project aimed at introducing the AUSPBP technology at TAEC for the first time for maintaining the lifespan, reliability and efficiency of the institution UPS batteries.

1.3 Rationale of the Project

From a survey conducted at TAEC with Head of ICT and Statistics prior the execution of the present project, it was reported that UPSs are getting spoiled from time to time to the point that has become a point of concern. Each UPS costs about 3 000 000 Tanzania Shillings. A new battery costs half of the mentioned amount. If ten of the UPSs could get spoiled every year, the institution would be losing about 30 000 000 TSh which would be a huge loss to the institution. Maintaining the lifespan, reliability and efficiency of the UPS battery using other independent technology

should be sought (Palamar, 2020). Therefore, designing an effective standalone system that can cost the institution less than the cost of one UPS is a great way to reduce the cost. The proposed system shall protect the UPSs batteries by monitoring the flow of power to the UPS from the mains. Once the supply of the power to the UPS is detected off by the sensor, the system will trigger a relay and start counting down towards the shutdown. When the specified time elapses before power is supplied to the UPS from the mains, the system will shut down the UPS to protect it from having its battery drained to zero level. The system shall also monitor the voltage produced by the UPS battery. Once the voltage produced is less than the recommended voltage, the system sends a message to the concerned person and it cuts off the power supply to the load so that the battery cannot be completely drained up.

The proposed system has high-cost benefits. The system will reduce the costs of maintenances because it is able to protect against over-draining of batteries, failure to protect the loaded electronic devices, buying new UPS because battery issues shall be detected earlier enough, therefore, allowing UPS batteries to perform to the maximum as designed to be.

The development of the Automated Uninterruptible Power Supply Battery Protector project deployed the use of cheap components such as sensors and wireless communication protocols. The decision for cheap components significantly reduced the cost of the development which is the main aim of embedded systems: To increase performance at a low cost in comparison to other existing systems. The developed system is capable of performing both effectively and efficiently its intended functions without any issues. Therefore, these benefits outweigh the costs of developing and implementing the proposed developed system.

1.4 Project Objectives

1.4.1 Main Objective

To develop an Automated Uninterruptable Power Supply Battery Protector for deployment at Tanzania Atomic Energy Commission headquarter located in Arusha region.

1.4.2 Specific Objectives

(i) To identify requirements for developing an Automated Uninterruptible Power Supply Battery Protector.

(ii) To design and develop an Automated Uninterruptable Power Supply Battery Protector.

(iii) To validate the developed Automated Uninterruptible Power Supply Battery Protector.

1.5 Project Questions

(i) How to identify the requirements for developing uninterruptible power source battery from getting drained to zero level during blackouts when the uninterruptible power source is left on?

(ii) How to design Automated Uninterruptible Power Supply Battery Protector to protect UPS battery from getting drained to zero level during blackouts when the UPS is left on?

(iii) How to validate Automated Uninterruptible Power Supply Battery Protector with UPS?

1.6 Significance of the Project

Most of the existing UPSs depend entirely on human physical interventions. When there is a power blackout, the system beeps to alert the users to switch it off. But when there is no one to switch off the system, it keeps on beeping till voltage in the battery runs out and the system goes off. Therefore, the proposed Automated Uninterruptable Power Supply Battery Protector is significant because shall be used in real-time to monitor the supply of power to UPS and switch it off when the specified time elapses or the minimum voltage level is reached. The system will automatically switch off the UPS before the battery voltage drains to zero level. The system shall inform the concerned personnel on any issue detected with the UPS battery.

In today's world, automation of activities is the solution to solve human errors because it will replace most of human activities. Humans contribute more errors as compared to an automated system that can eliminate almost all errors (Joshi & Kumar, 2013). The uses of automated systems reduce human's direct interactions in most of the processes which can lead to improved quality of activities and facilitate better daily routines in life (Bharti *et al.*, 2021). In some cases, electrical appliances which can be considered unnecessary are left on in a state of unconsciousness resulting in power losses from the UPS battery and when these loads are turned off when not in use, the battery often lasts longer, but this requires some physical effort and technology from the user side. Therefore, this leads to the proposed way to build a smart UPS system that will automatically shut down/on high priority, lower loads, and medium critical loads which are always specified during UPS installation based on the user requirements (Bharti *et al.*, 2021).

The proposed system will significantly reduce the damages caused to UPS as a result of human error and power failures. The system will reduce the cost of buying new UPS and replacing UPS batteries at TAEC. In the event the supply from the mains fails, the proposed AUPSBP will detect the failure, display and report the voltage being supplied by the UPS battery, and automatically

operate based on the predetermined algorithm. As with battery power consumption, when the battery is overloaded, it tends to run out of power and this shrinks battery health. This continues to reduce battery life by a significant amount beyond the point of operation. In case overloading is detected, the user can remove the other unnecessary loads to relieve the battery from over-draining (Bharti *et al*., 2021).

Moreover, the proposed system may not only be used by TAEC, but the entire world would benefit from it because it is going to be used on all forms of UPS. The AUPSBP is going to be a standalone system that can be used and reused on different UPS. The project will open a wider avenue for developing future full self-guarding UPS.

1.7 Delineation of the Project

The focus of the present project lies on how UPS battery issues at TAEC can be cost-effectively solved using locally developed solutions. Though the study which led to this project was done exclusively, the current scope considers only TAEC as a case study. The UPS battery problem is a global issue that needs to be addressed. The TAEC being part of the globe has been negatively affected both financially and technically by the y UPS battery issue. Based on the research objectives and research questions thoroughly studied, Automated Uninterruptible Power Supply Battery Protector has been proposed and designed as the best solution to solve the identified UPS battery issue both at TAEC and the world at large. The study will swift UPS' dependence on physical human intervention to a human independent embedded system. Though UPS' inability to protect its battery is a worldwide issue, the study is narrowed as a pilot project only to TAEC.

CHAPTER TWO

LITERATURE REVIEW

2.1 Introduction

The literature review helped in finding out the relationship between other ongoing dialog about the subject, and what gaps are there to be filled by the project. Therefore, the findings from the literature reviewed helped in providing a framework for establishing the project for solving the UPS problem.

The term "uninterruptible" refers to the power supply's ability to react rapidly enough to prevent the gear from losing power if the primary power source fails (Lahyani *et al.*, 2013). This means the UPS must be able to activate backup power within 25 milliseconds of a power outage. The majority of UPS batteries are lead-acid (Strods & Pecka, 2018). According to Cun *et al.* (1996), UPS has been in use since John Hanley completed the first UPS in 1934 in the USA.

When the primary power source fails, the UPS kicks in to provide backup power to the loads. The UPS has a very basic overall design, despite its complexity. Power inputs for obtaining commercial power during normal operation, power outputs for the protected and connected equipment, and backup batteries are all included in every UPS to prevent interruption of power to protected gear when the commercial power is lost (Strods & Pecka, 2018).

For intermediate duty UPS, sealed, lead-calcium low-maintenance batteries are common, but they are prone to failure if depleted repeatedly (Lahyani *et al.*, 2013). As a result, the battery initial cost, size and mounting requirements, estimated life, and criticality of the equipment to be protected should all be considered when selecting a UPS (Carle, 1993). Lead-acid batteries' life is regarded to be irreversible when the dischargeable capacity of a battery is below 80% of the specified capacity; at this stage, the battery is considered to be terminated (Hsiao *et al*., 2014). Therefore, the project aims at keeping battery capacity above 80% of its rated capacity though each battery has stages to pass during its lifetime which include: The steady phase has a discharge capability of more than 100%, whereas the declining phase has a discharge capability of 100% to 80% and lastly, breakdown phase has 80% to approximately 35% battery discharge capacity. The lead-acid battery's service life can be categorized based on the discharge capacity of a battery. When the discharge capability is below 80%, then internal polar plate would quickly deteriorate and break down, and at this stage the battery should be discarded (Hsiao *et al*., 2014).

The discharge cycle occurs during a power outage when a UPS operates on battery power and

recharges the battery for future use. When a battery is placed, it is fully charged and ready to use. However, each discharge and subsequent recharge diminishes the battery's capacity gradually (Mike, 2020).

2.2 Literature on the uses of Uninterruptible Power Supply

The UPS can be found in a wide range of sectors. Small power rating for personal computer systems, medium power rating for medical facilities, life-supporting systems, data storage, and emergency equipment, and high power rating for telecommunications, industrial processing, and online management systems are some of the most prevalent applications (Weber & Nasiri, 2016). The UPS is needed to reduce electrical shortage during power blackout.

To eliminate or reduce the electrical energy shortage during load power shedding or power blackout period, several backup measures such as alternators, batteries, and backup UPS are taken into consideration (Bharti *et al.*, 2021). Uninterruptible power supplies are extremely important part of the electrical infrastructure where high levels of power quality and reliability are required (Guerrero *et al.*, 2007). When the power from the mains supply fails, the operation continues from the output inverter, but the power now is delivered from the backup power source and this backup is always the UPS battery which supports loads that are electrical critical.

Normal UPS starts working immediately after the power is cut off or the voltage supplied drops to a level that is unacceptable, this may cause rapid battery load and slow battery life due to undesirable loads or heavy performance (Bharti *et al.*, 2021). The UPS is necessary for providing power backup when high commercial power fails, either long enough for critical equipment to shut down properly to prevent data loss, or long enough to keep the required loads in working condition until power from the main pipes returns. The UPS offers two functions. First, it provides a secure power source when the main AC power supply fails, and then supports the load while the power source goes from a utility to a generator. When the mains pipeline supply is on, the UPS provides clean and stable controlled power to the loads (Bharti *et al.*, 2021).

For the reasons given, power companies consider UPS to be a major source of pending power protection. The UPS have been designed in different sizes and types for different purposes can be referred to as power blackouts, power brownouts, power spikes, power sags, power surges, power line noise, switching transient, variation in frequency, and harmonic distortion. The efficiency UPS drops as the battery charge capacity decreases, the faulty battery consumes more power than its capacity and provides less or less power than expected (Bharti *et al.*, 2021).

2.3 Related Works on the Protection of Uninterruptible Power Supply Battery

At Merlin Gerin, it was discovered that a rising number of clients want to know the state of their UPS battery voltage and the amount of time they have left. When the autonomy goes below acceptable limits or when the UPS batteries need to be replaced, they prefer alarms (Cun *et al.*, 1996).

As a solution for preventing UPS batteries from getting drained to zero level, some UPS manufacturers designed ways for helping their clients on how to choose and take care of their UPS. We have to keep in mind two things when selecting a method to give the end-user the battery backup time available, if capacity falls below acceptable limits, an alarm or when battery needs to be changed: First, there is a need for enough accuracy to make the metering useful for the end-user, and second, the model has to be simple enough with a minimum economically viable parameters (Cun *et al*., 1996).

On the issue of maintaining UPS operational as designed by the manufacturers, it is technically advised that self-maintenance on a UPS may make financial sense if a business has an internal resource with acceptable electrical and safety capabilities. The most important component of self-care is having a well-thought-out strategy (Guerrero *et al*., 2007).

Most UPS systems have included software that alerts one or more servers when AC power is interrupted and the UPS is on batteries. If the battery energy is approaching depletion and the AC power does not return, the program shuts all open applications to prevent data loss. The UPS immediately reboots when AC power is restored, restoring the system to its prior condition (Guerrero *et al.*, 2007).

Some smart energy upgrades are also upgraded to UPS using the principle of monitoring power consumption and dividing the day by different time zones depending on maximum load and fixed or low load hours. Monitoring provides suggestions for efficient use of electricity at various times and for various needs. In addition, with the help of this model, backup power supply monitoring can be done and the remaining power can be done wisely by providing power to critical electrical loads so that the required equipment is operated longer than a standard UPS. This model can also be used as a power control tool for backup items (Bharti *et al.*, 2021).

2.4 The Identified Existing Gap in Uninterruptible Power Supply

Manufacturers continue to add more useful features to UPS to provide better protection to other electronic devices, but the protection to UPS batteries remains mostly unattended.

Although the number of UPSs in a single workplace is quite significant, battery failure or depreciation is not identified promptly owing to a lack of management hardware or software. As a result, UPS is unable to provide hardware in the event of a power outage or possibly damage the UPS (Strods & Pecka, 2018). Different manufacturers of UPS also offer monitoring solutions, however, the difficulty is that these solutions are not adaptable to UPS manufactured by other manufacturers (Strods & Pecka, 2018). Battery damage is another problem. A loss of power that exceeded a battery's capacity was investigated, and it was discovered that the battery had failed due to complete discharge because there was no cutoff, necessitating battery replacement. When the system voltage dropped below a certain threshold, the UPS went into emergency mode, and the batteries totally drained, requiring replacement (Carle, 1993). This emphasizes the necessity for an automatic system to protect batteries before they reach their lowest limit, as well as an alarm to alert maintenance to manually turn them off (Carle, 1993). Although independent service providers are frequently less expensive than UPS manufacturers, they typically have fewer resources and may not be fully trained on the products effectively for monitoring and maintaining a particular UPS model (Guerrero *et al.*, 2007). Sealed lead-acid batteries are an essential backup power supply for telecommunication power supplies that aren't interrupted. They must provide energy to the telecommunication equipment in the event of a power outage for as long as the outage lasts. As a result, a continuous, online display of the state of charge of batteries, as well as an evaluation of their usable capacity, is critical for service continuity (Kutluay *et al.*, 2005). Since UPS depends on human intervention, automation of systems is the solution to solve human common errors and replace the human activities, because humans can err easily, but an automated system reduces error level to almost zero (Joshi & Kumar, 2013).

All the aforementioned UPS types and sizes have been in operation with some solutions been provided to particular type of UPS, however, from all the reviewed literature, it is clearly discovered that UPS batteries do still suffer a great deal because there is no single solution provided by one manufacturer to protect UPS battery and all types of the existing UPS. Therefore, provision of universal system to protect all types of UPS is needed and of a great advantage to existing UPS.

2.5 Chapter Two Summary

The main purpose of the chapter was to carefully study closely related literature to support the proposed project, find a gap, and bridge it. In the chapter, it was discovered that there is no existing system to protect UPS battery, therefore, here comes a need to develop a system to independently monitor, inform and switch off UPS in order to prevent its battery from completely getting drained out during power blackout. The chapter has motivated the development of AUPSBP to monitor the flow of voltage to UPS using a voltage sensor, inform technician when a UPS goes off before the specified time during blackout through SMS using GSM mobile technology, switch off when UPS battery voltage goes lower then specified for a normal operation by a technician.

CHAPTER THREE

MATERIALS AND METHODS

3.1 Overview

During the development of AUPSBP, Agile Methodology was selected as the general method and Kanban as the subset of the method during the development process. To illustrate for better understanding, the Agile Methodology flowchart general process used during the system development is shown in Fig. 1.

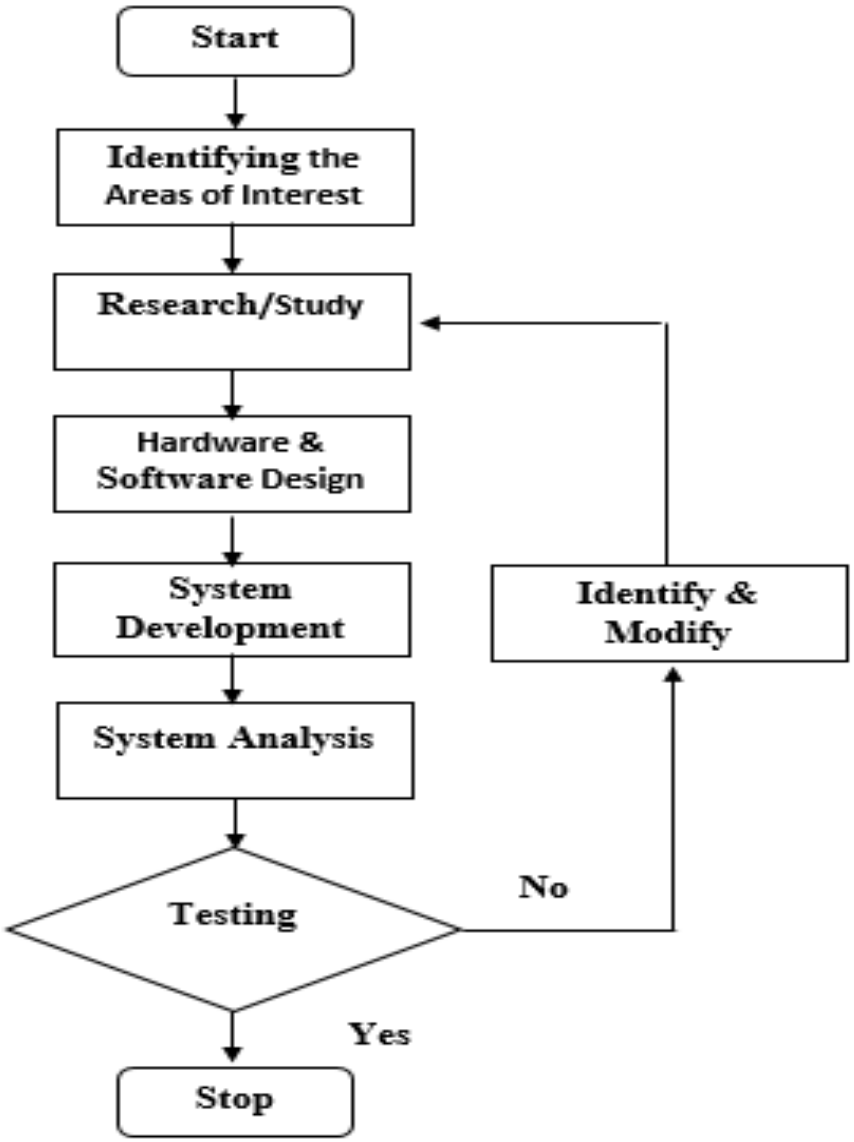

Figure 1: Project Flowchart using Agile Methodology (drawing as per the present study)

3.1.1 Kanban Agile Methodology

Kanban type of Agile Methodology was selected for the development of the Automated Uninterruptible Power Supply Battery Protector because it provided easy and effective procedures

that were followed to achieve the project's intended goal. Through the selected subset of Agile Methodology, the project was developed in a way that answered both the general and specific objectives of the proposed project. This was achieved by accurately following up several sub-activities which were implemented sequentially due to their interrelated nature. Kanban Agile is iterative at its specific stages and can fully engage the developer and the client during development. Therefore, Kanban Agile method contributed positively to the development and achievement of the stated objectives of the project through the following explained steps:

(i) Stakeholder Engagement

The method allowed stakeholders to collaborate at any phase of the development. It created a friendly environment for the stakeholders to cooperate through trust and motivation. Therefore, the two parties developer and client heartedly devoted to the process.

(ii) Transparency and Improved Visibility

Kanban Agile method philosophically provided a chance for the client to get involved in the system development process right from the start stage to the implementation stage. Kanban methodology never passes on defective products, it takes only what is needed from one stage to another, produces the exact quantity required, has levels during the development, and it fine-tunes the product during the development as described by Invensis Learning Company (ILC). Finally, the Kanban methodology stabilizes and rationalizes the development process as shown in Fig. 2.

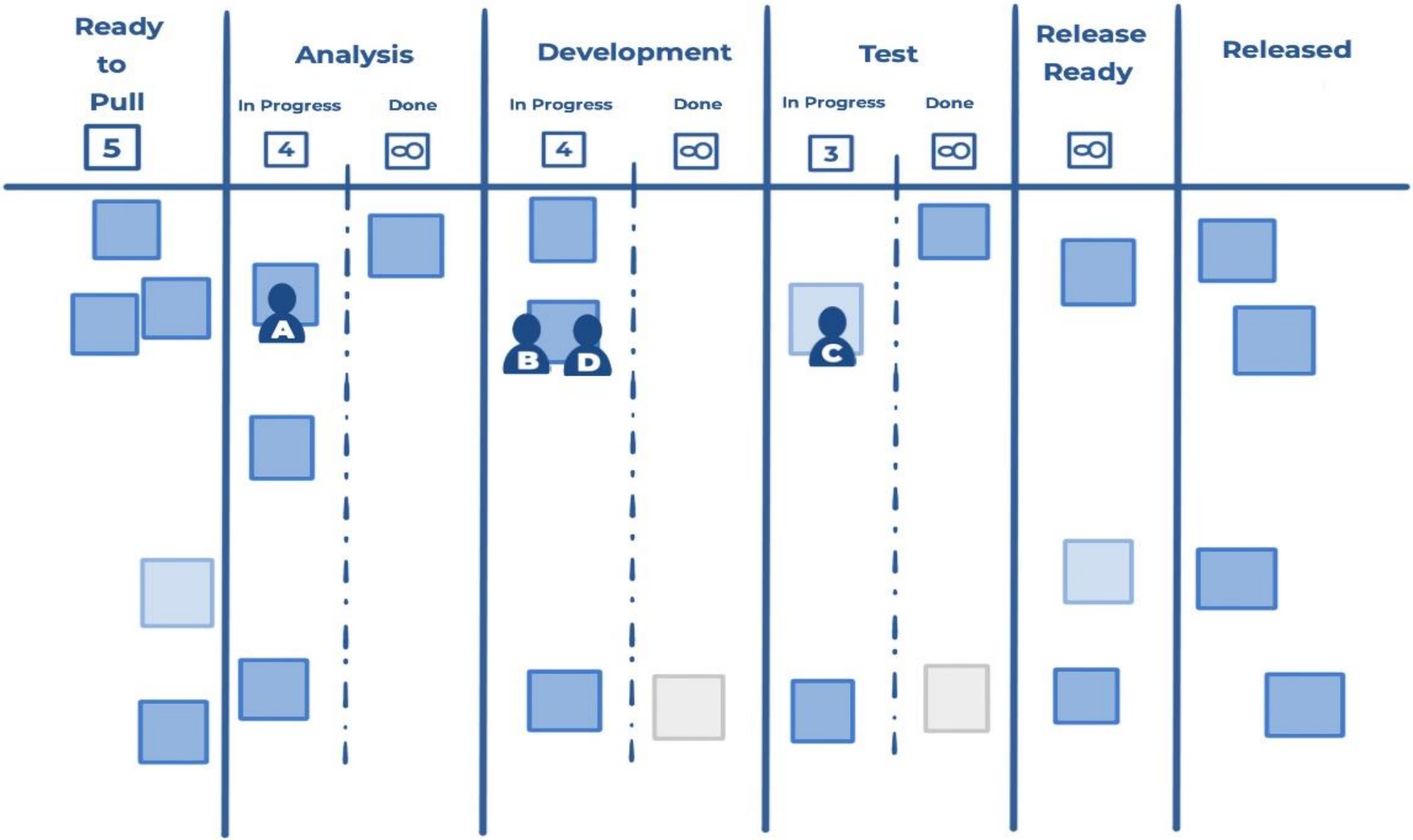

Figure 2: Development Flowchart of Kanban type of Agile Methodology (Nextupsolution)

3.1.2 Why Kanban Agile?

Due to preference based on easy usability, Kanban Agile was selected for developing AUSPBP. Followed are the reasons why Kanban Agile Methodology was preferred for development over other methodologies:

(i) Expected Early Delivery

Since there was strong cooperation between the stakeholders, time was followed which allowed the developer to provide updated components faster than expected in other methods. As a result, the system was released faster than expected and well tested before the scheduled time.

(ii) Leaved Place for Modifications

As the developer's focuses was on providing the pre-agreed subset of the system during the development, there was ample space to continually refine and reprioritize the important aspects of the system.

(iii) Allowed an Approach which is User-Centered

Kanban Agile method mostly centers on user stories relating to perfect highlights and business-oriented entrance standards must be met. When the system was developed with the user-driven philosophy, each component of the system added value not just to the development segment, but to business as well. This gave the privilege for testing the system better after each part was developed, increased valuable input right on the way as the system was being developed, this provided the ability to alter things as needed while the development continued.

(iv) Improved Quality

By separating the tasks into doable units, the developer was highly focused better construction, assessment, and collaboration. Quality was enhanced by detecting and addressing faults quickly and recognizing expectation mismatch early by offering continuous building and guiding surveys during each iteration.

3.2 The Study Area

The project's area of study is Tanzania Atomic Energy Commission. The TAEC is the leading government institution for controlling radioactive sources in Tanzania. Its headquarters is located in Njiro, Arusha Tanzania. Due to the institution's wide range of use of electronics, the institution is selected as one the institutions for internship by the Mandela African Institution of Science and

Technology. Therefore, having internship at TAEC gave a privilege to identify the UPS batter issue.

3.3 Project Design

For the effective deployment of the project the following components were used: Printable Circuit Board (PCB) mounted with ATMEG328P, Voltage Sensor, Current Sensor, LoRa, and GSM. The project design was aimed at developing an automated system to monitor and control UPS in real-time. The following listed are the integral parts that formed the plan of the project implementation:

3.3.1 Target Population

Though UPS battery drainage issue due lack of a system to monitor, inform and switch off UPS is face with many UPS users, the main target population for this project and at the particular time, is the population at TAEC. The project's main aim is to provide a solution to the UPS battery drainage issue identified at the institution as its specific objective.

3.3.2 Data Collection

(i) System Requirement by the End-User

Though information on frequency, cost and number of UPS battery damaged in the institution was collected from the beginning, there was still a need to base the information on evidence. In order to better understand the need for developing Automated Uninterruptible Power Supply Battery Protector for the institution, data on the end user need for AUPSBP were locally collected through interviews with the ICT department at TAEC as shown in Appendix 4, and observation of UPS's usages in the institution. The said data collection methods were used to know the frequency, cost, and the number of UPSs getting damaged in the institution per year. Through unstructured interviews and keenly participatory observations of how UPS were being used, it was possible to gather satisfactory required information and understand why, AUPSBP should be developed for the institution. Through interviews, it was discovered that many people have experienced UPS issues and these issues were clearly explained by the electronics department at TAEC, as results of improper care for UPS batteries. It was also observed that, many users rush out at the time when they need a lift or the bus comes to pick them for going back home; leaving their UPS on and due to frequent power blackouts, batteries get damaged. Moreover, for a better understanding of UPS problems, secondary data were sought through related literature reviews. Through the literature review, it was found that for sure there is need to develop AUPSBP because the only common current solution is only for the UPS is to beep and someone has to switch it off manually.

Manufacturers tried to train technicians to maintain their UPS, but it is expensive and many trained technicians never performed as required and a technician trained on particular UPS cannot other UPSs. As stated, the reviews included both users' comments on the issues they observed with UPS batteries and what UPS manufacturers say on the same. From the literature reviewed, there was clear understanding that still there is problem and this is why AUPSBP is much needed.

(ii) System Development Requirements

For the identification of System requirements for the project meeting, interviews with the managers and stakeholders at TAEC on the possible requirements for the project, as well as observations of UPS's usages in the institution as per the first objective under this project were done. Every beginning of the month meeting was carried out for the period of four months. Head of department of ICT was part of the meeting providing instructions in the area of ICT such as types of UPS and coding. Every end of a month meeting was carried out with the head of electronics department. His roles was to check and advice on the electronic part. Head of procurement department was also involved to see that the cost of developing AUPSBP was not near to UPS's cost. It is at this stage that a feasibility study on the requirements was conducted to determine the viability of the proposed components for the project, the advantages and disadvantages of each component were identified, the right skills for the completion of the project was identified which led to the understanding of the rough idea of the finance needed and the time for completing the project. Furthermore, system requirements in the forms of both hardware and software were sought through literature search. This is because, the successful development of Automated Uninterruptible Power Supply Battery Protector depended on the important required components such as correct skill, correct hardware, correct software, and the time required to develop the system

3.3.3 System Requirement Analysis

Requirement analysis is the second phase followed in the system life cycle after requirement planning. Its purpose was to collect and interpret facts, identify problems and divide the main system into components. In requirement analysis, the requirements of the end-user are documented and finalized. The performance of the requirement analysis of the feasibility study was conducted to evaluate whether the project is viable, feasible technologically, financially and organizationally.

(i) Functional and Non-Functional System Requirements

Through the use of system requirement analysis, it was possible to identify which requirements were functional and non-functional to the system.

Functional System Requirements

(a) The system shall have both AC and DC power supply

(b) The system shall contain functions of both voltage and current sensing

(c) The system shall be able to operate independently

(d) The system shall be able to switch off a UPS

(e) The system shall be able to communicate with the hub through LoRa

(f) The hub shall be able to communicate with a phone using GSM

(g) The system shall be able to issue timely information on the status of the UPS battery

(h) The system shall be available at all times

Non-functional System Requirements

(a) The system should be easily usable

(b) The system should be accepted by the user/user friendly

(c) The system should be securable from intruders

(ii) Hardware Requirements

The main used hardware for the Automated Uninterruptible Power Supply Battery Protector are summarized in Table 1.

Table 1: Required Hardware

S/N	Component	Quantity
1	ATMEGA328P	3
2	Power supply	3
3	Relays single channel	3
4	OLED	3
5	GSM	1
6	Copper Boards	3
7	Motors	2
8	Current Sensors	2
9	Voltage Sensors	2
10	Buzzer	3
11	LEDs	12
12	LORA	3
13	UPS	1

The identified required hardware for the development of Automated Uninterruptible Power Supply Battery Protector includes: Printed circuit board (PCB) as the mainboard for the components, Atmega328p as the main microcontroller for the system, voltage, and current sensors to sense both the presence of voltage and current in the cables which supply power to the UPS and the loads, servo motor as the main actuator and relays for switching of the servo motors, power supply, OLED to display the status of the battery, 9 v battery which would supply the system with DC power, buzzer to provided warning beeps during the countdown before the system switches off the UPS. Red and green LEDs and jumpers are needed in the system. The green LED shows the presence of power and red shows the absence of power in the cable and jumper cables for the connections. Moreover, there would be a frame on which the whole system would be mounted.

Microchip ATmega328p

To reduce the cost of production and operation, Automated Uninterruptible Power Supply Batter Protector was designed as an autonomous project to run on low power and low-cost microcontroller. To fulfill the aforementioned objectives, ATmega328p was selected as the best microcontroller for implementing the project. Moreover, the ATmega328p microcontroller is compatible with the Arduino development platform. Using Arduino Integrated Development Environment, it can be easily programmed to perform the project's objectives.

Figure 3: Microchip ATmega328p

Printable Circuit Board

The Printable Circuit Board functions as a plate that contains all the electronic components intended for the effective operation of the system and allows circuit components to exchange signals between each other as well as other external connected devices (Fig. 4.)

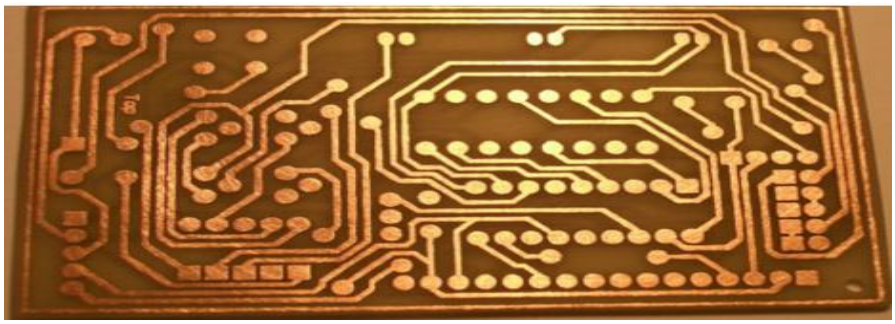

Figure 4: Printable Circuit Board

Organic Light-Emitting Diode

Organic Light-Emitting Diode (OLED) is an electronic device that converts electrical signals into visual signals (Fig. 5). The OLED used in this project is 12x12 designed to display the mains status, voltage level of a UPS battery, and current both in words and in digits.

Figure 5: Organic Light Emitting Diode

Relay

Closing and opening of circuits electronically are the main functions of the relay. In short, the relay is an electronic switch that controls the opening and closing contacts in an electronic circuit (Fig. 6). The relay in the project was used for controlling the switching off of UPS based on the set of instructions loaded for running the system.

Figure 6: Single Line Relay

Goble System for Mobile Communication

Global System for Mobile communication (GSM) technology is a digital system developed on Time Division Multiple Access (TDMA) technique for communication purposes (Fig. 7). Through GSM technology, data is digitized and reduced to be sent down through two different streams channel with client data, each with a different particular time slot. The GSM is used in this project as a cheaper yet effective technology for sending short messages about the status of a UPS battery. It sends a message from the system hub to the subscribed phone numbers.

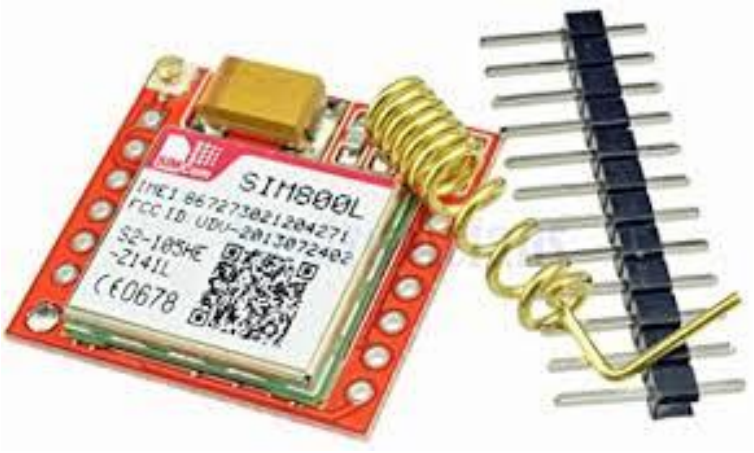

Figure 7: Goble System for Mobile communication

Long Range

Long Range (LoRa) is one of the wireless technologies which is still coming up. The LoRa is known as a spread spectrum modulation technology which is derived from Chirp Spread Spectrum (CSS) technology (Fig. 8). It can be used to connect devices such as machines, gateways, and sensors wirelessly. The LoRa provides long-range wireless communication at low power with a secure data transmission mechanism for Machine to Machine (M2M) communication and the common transmission technology for the internet of things (IoT) applications (Fig. 8).

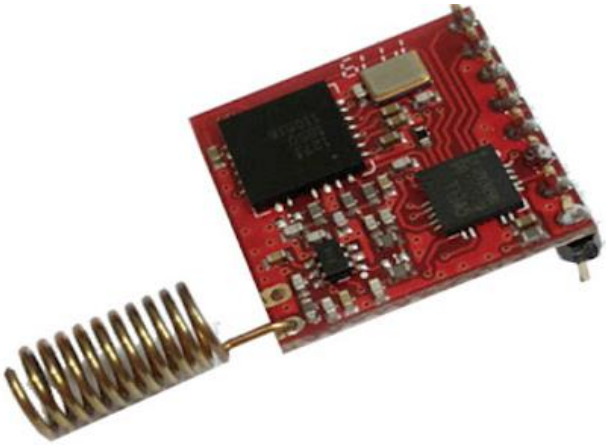

Figure 8: Long Range

Power Supply

The power supply can be alternated current or direct current electronic circuits designed to provide voltages for various equipment operations. In this project, both low DC and high AC power supplies have been deployed for the operations of the integrated circuits (IC) and transistors.

Figure 9: Power Supply

Servo Motor

Servo motor is an electronic device that can either be rotary or linear used as an actuator to rotate and push parts of a machine mechanically with precision (Fig. 10). Servo motor was used in this project to push the UPS button during the shutdown.

Figure 10: Servo Motor

Voltage Sensor

The voltage detection sensor module is a simple and very useful electrical device that uses a potential divider to reduce any input voltage by a factor of 5. In this project, the voltage sensor's analog input pin was used to monitor voltage flow to a UPS.

Figure 11: Voltage Sensor VCC<25V

Current Sensor

The current sensor is an electronic device that can detect and convert current to an output voltage (Fig. 12). This voltage is always directly proportional to the current in the specifically designed path. A current sensor in this project was used to recognize electrical current in a UPS output wire to create an indicator relative to it.

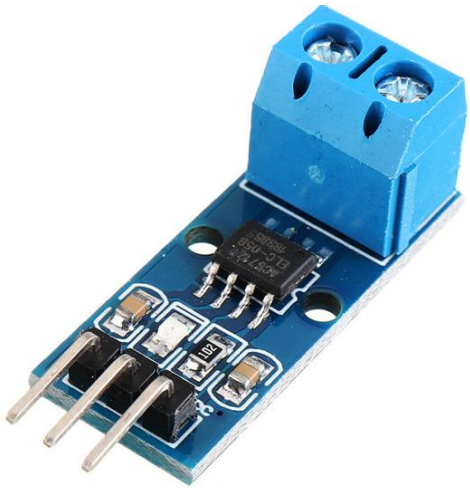

Figure 12: Current Sensor

Buzzer

The buzzer is an electronic device that is mainly used as a warning tone also as an alarm sound in electronics (Fig. 13). The buzzer is an acoustic electronic component with an integrated structure, it supplies power with direct current voltage. The buzzer was used in this project as it is used in

other electronic devices to provide a warning to a UPS user once the power goes out and the system is counting to shut down.

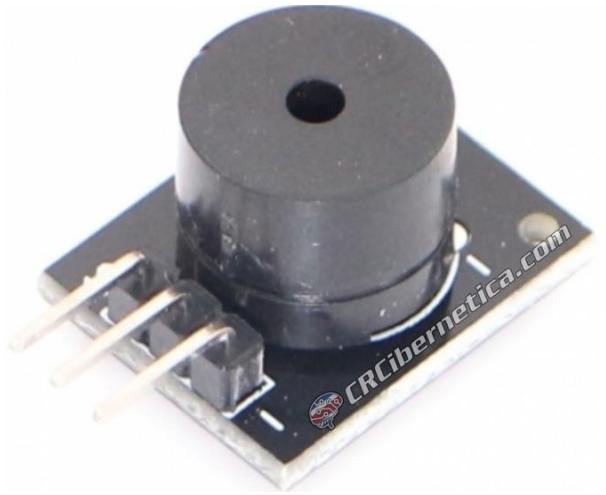

Figure 13: Buzzer

Light Emitting Diode (LED)

A light-emitting diode (LED) is a light source with two lead semiconductors. The LED operates on a p-n junction principle. When LED is activated, it emits light. For LED to emit light, a suitable voltage has to be applied to the leads and, as the result, electrons can recombine with electron holes within the device, which releases energy in the form of photons (Fig. 14).

Figure 14: Light Emitting Diode

Power Ports

The power ports provide interfaces for plugging the loads to AUPSBP for ease monitoring of power follow from UPS battery to the loads (Fig. 15).

Figure 15: Output Power Ports

(iii) Software Requirement

As an engine to the required hardware, the software is an integral part of the system needed. The basic software used during the development of the system included: Proteus, Fritzing, Arduino Integrated Development Environment (IDE), and C as pasted in Appendix 1 and 2.

3.4 System Design

Based on the aforementioned reasons as why Kanban Agile Methodology was preferred and selected for the development of the project, it can be clearly proven that Kanban helped the team to define and determine what activities were to be done in iteration to achieve the project. Kanban helped in the design and plan of how the requirements were to be built into a product, the methodology drove the building and making the design to the real product. The last and the most important part and the main objective of the project was achieved through testing and verifying the product functions to prove the designed AUPSBP met all the end-user's requirements before the release of the product to the customer, in this case, TAEC. Therefore, system design is the phase that dealt with the development of the design that fulfills the objectives of the system developed. It focused mainly on the system process and technology. This process came after understanding the customer's needs. The design generally was made as a rough sketch before the detailed, expanded, and explained system was developed as described in the following sections:

(i) General System Flowchart for the Developed Automated Uninterruptable Power Supply Battery Protector

The system flowchart illustrated in Fig.16 shows how the system functions in order to deliver it's require functions as dictated by the objective.

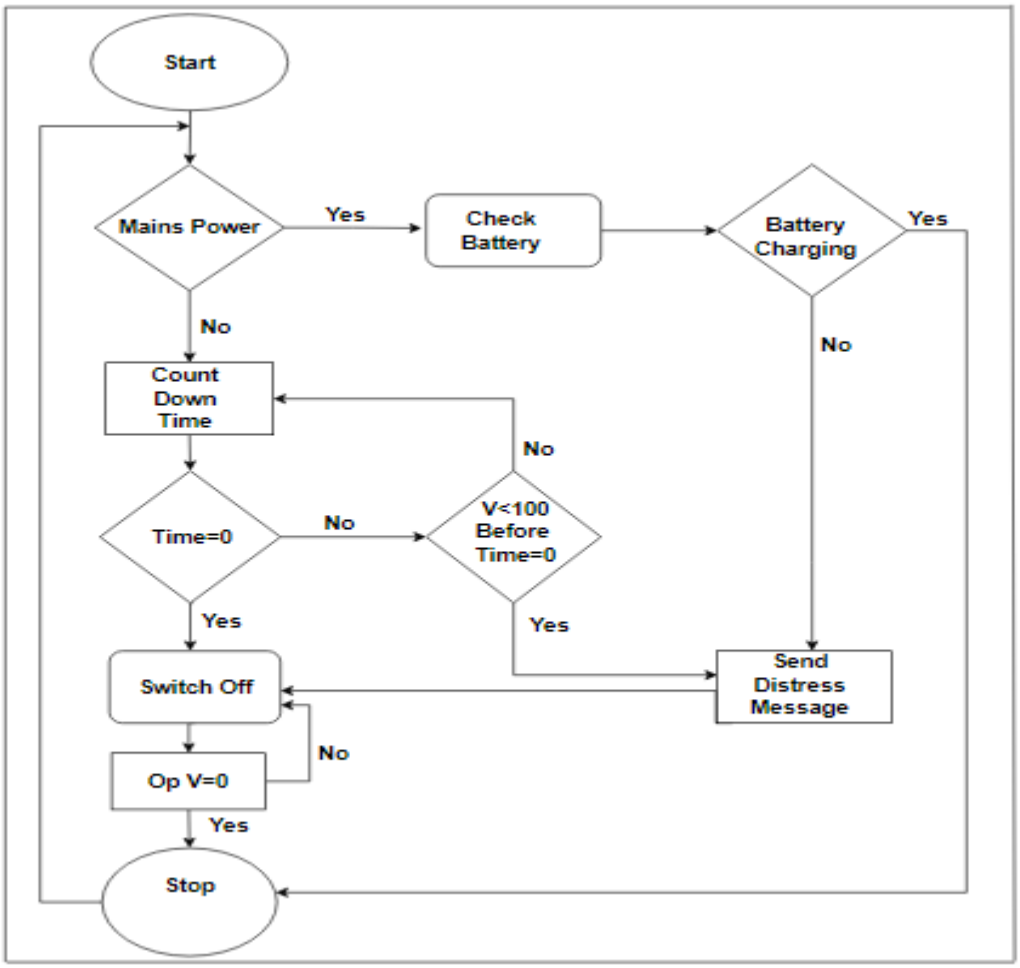

Figure 16: System Flowchart

The proposed system was designed as a robotic system that would be externally attached to a UPS by the use of a frame, and have constant communication with the hub through LoRa wireless technology. In case of any irregularity in the UPS, the main system signals the hub, and the hub sends SMS to the prescribed phone numbers with the details of the issue sensed in the UPS battery.

3.5 System Development

System development is the stage where system definition, designing, testing, and implementation of the new system is made to satisfy the customer's identified requirements. The developed Automated Uninterruptible Power Supply Battery Protector has two parts. The first part is the main system which does the monitoring and switching off of UPS mechanically. The second part of the system is the hub, its function is to report UPS batter status to the concerned person.

(i) The main System

The main system shown in Fig. 17 and 18 is part of the developed Automated Uninterruptable Power Supply Battery Protector that monitors and switches off the UPS. It is an independent device that is physically connected to a UPS for monitoring and switching off a UPS. The main system

consists of input and output parts. The input part includes the AC power source, DC power source, voltage sensor, and current sensor. The system uses an AC power source when the power from the mains is available, but once there is a blackout, it automatically switches to a DC power source. The DC does the reporting and switching off of UPS. The voltage sensor monitors the flow of voltage from the mains to UPS. When the voltage is not detected, it reports zero voltage to the microcontroller which activates count down towards shutting down the UPS. The current sensor monitors the flow of current between the loads and the UPS. The main system's output part includes a buzzer, actuator (servo motor), LoRa, LCD, and LEDs. Buzzer produces a warning sound when there is a power blackout and the system is about to switch off UPS. The actuator switches off the UPS mechanically. The LoRa wirelessly connects the main system to the hub. It provides a connection for transmitting signals from the main system to the hub. The LCD provides visual information about power and battery status. The LEDs provide the status of the system's operation.

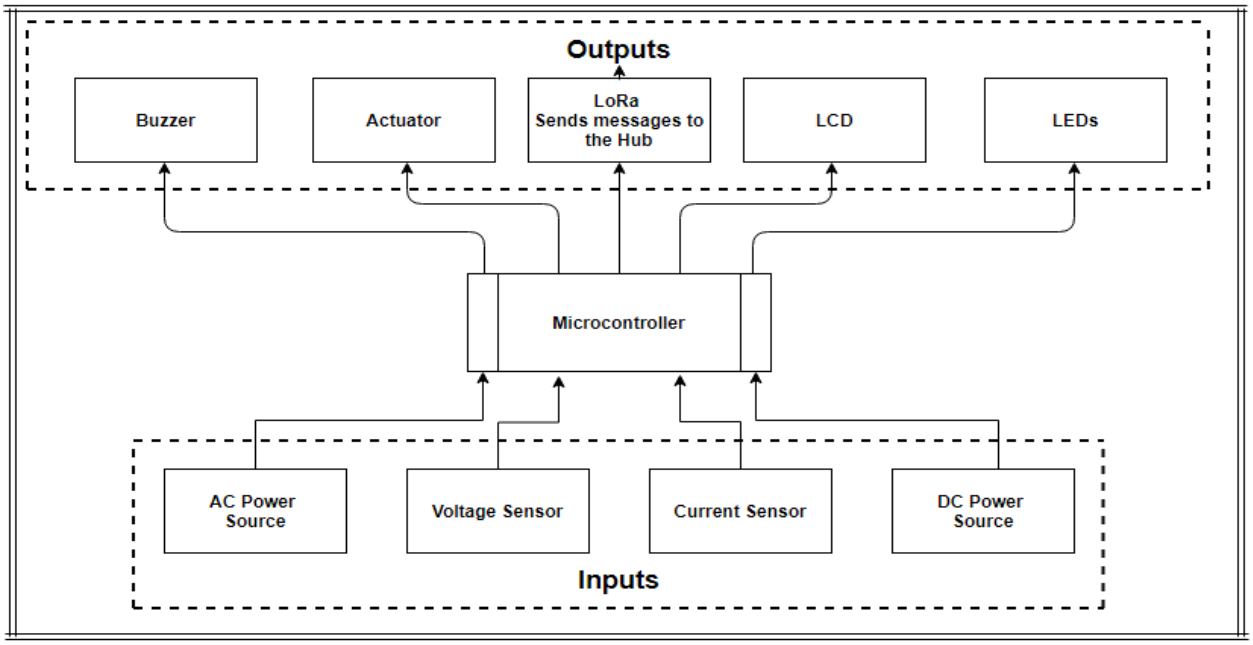

Figure 17: Main System Conceptual Diagram

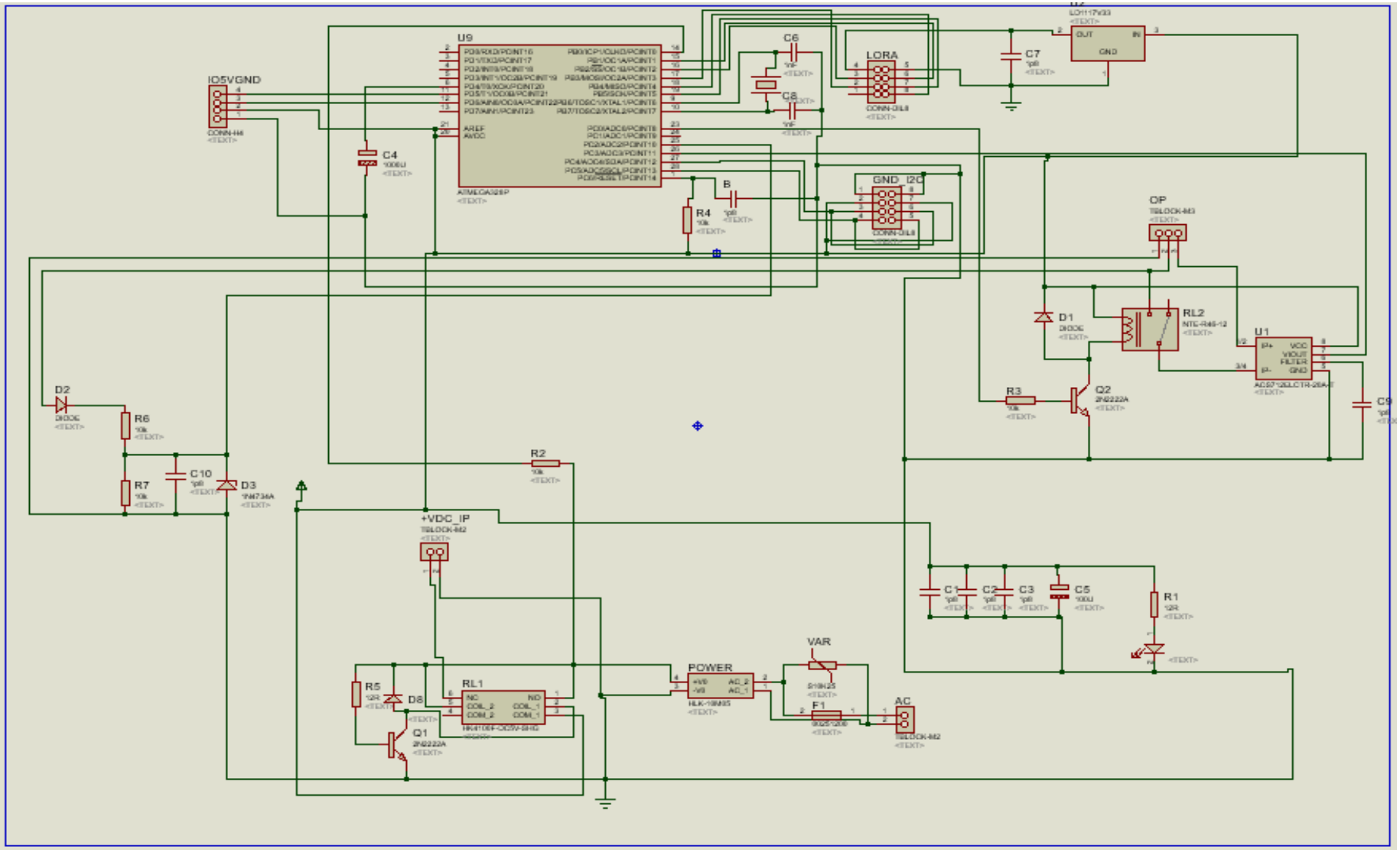

Figure 18: Main System's Circuit

The System Hub

The hub has input and output parts (Fig. 19 and 20). The input part includes: DC and AC power sources and LoRa. The hub is connected to the monitoring and switching systems by the use of wireless LoRa technology. As a hub, it gets information from all the connected main systems and sends received information as SMS through GSM to the subscripted mobile numbers with a specific detail.

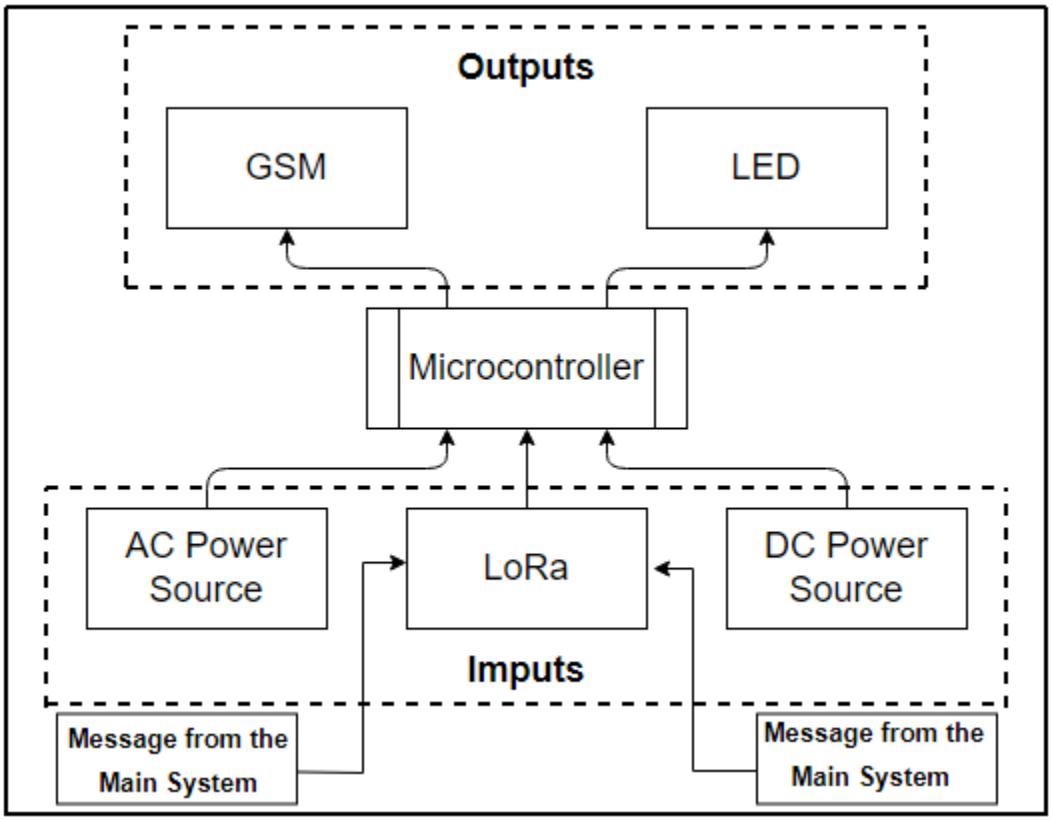

Figure 19: Hub System Conceptual Diagram

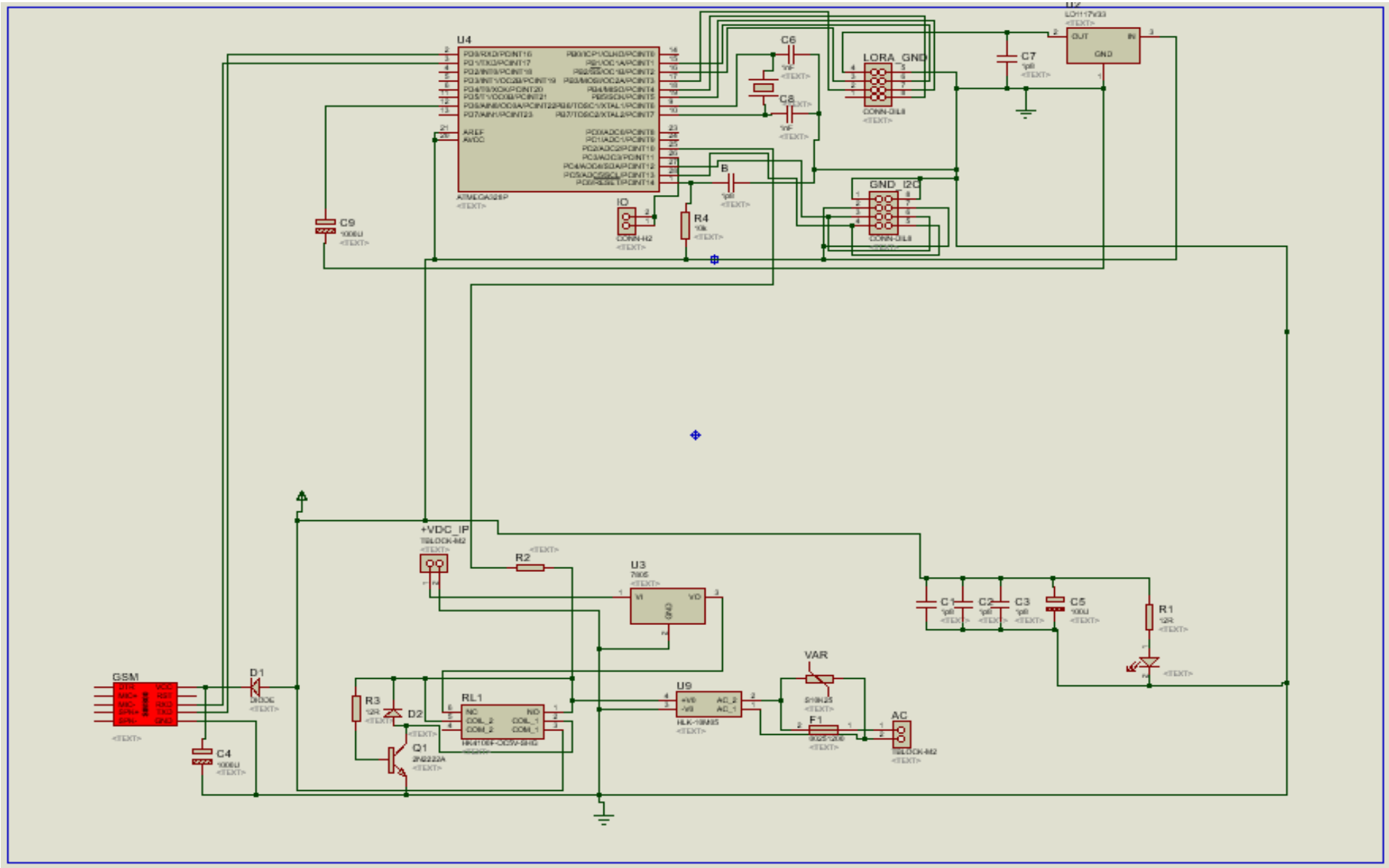

Figure 20: Hub System Circuit

Figure 21 shows the complete system diagram of Automated Uninterruptible Power Supply Battery Protector.

Figure 21: Block Diagram of the AUPSBP

Figure 22 shows a conceptual diagram of how power is supplied from the mains to UPS and then to AUPSBP System then finally to the Load.

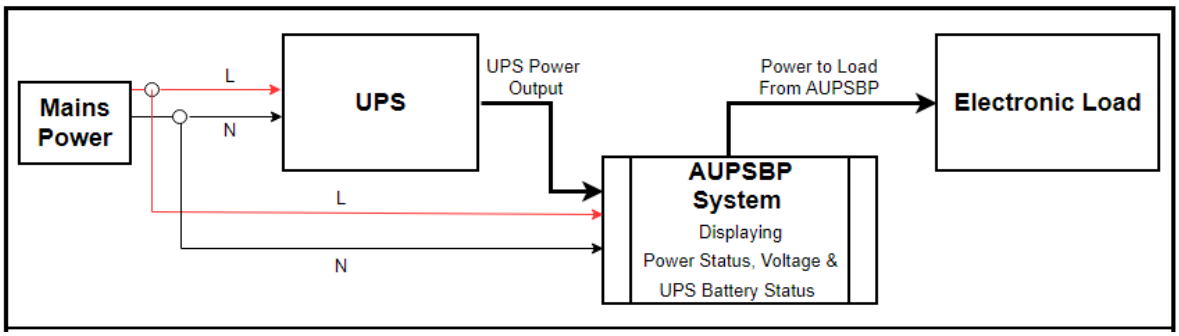

Figure 22: Conceptual Diagram of Integrated AUPSBP with a UPS and a Load

A conceptual diagram of AUPSBP fully integrated with a UPS, electrical load, hub and a mobile phone is provided in Fig. 23 to illustrate how the system works.

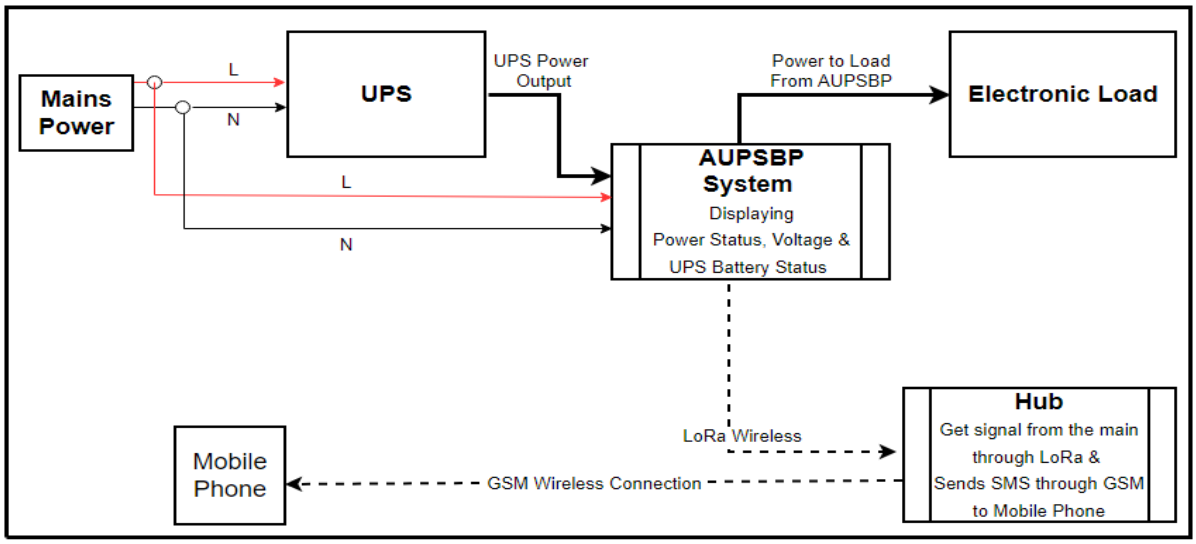

Figure 23: A Block Diagram of AUPSBP, a UPS, a Load and a Mobile Phone

3.6 Chapter Three Summary

The Chapter describes the materials, the methods used for the development of the system and the means used for validating the system during the development where developed sub systems and the whole system were validated. The materials were divided into two main categories of hardware and software, the methods too were divided into groups of general method and specific method, while validation was carried out by means of unit validation, integration validation and system validation.

CHAPTER FOUR

RESULTS AND DISCUSSION

4.1 Results

The result section of the project is where the report of all findings of the project based on the methodology used in chapter three are have been indicated. All the experiments of the project were carefully observed and recorded in this section as to explain the main objective of the project through the results produced by the project.

4.1.1 Integration and validation of the Automated Uninterruptable Power Supply Battery Protector with Uninterruptible Power Source

Validations is a set of actions used to check the compliance of any element for examples system element, a system, a document, a service, a task, a system requirement, etc. with its purpose and functions. It was needed for the purpose of assuring quality of the developed system. It helped in identifying and correcting system errors during system development, which led to the production of the specific required system. It reduced both time and cost for corrective maintenance, because most of the major errors were already corrected at every stage of the development. Validation was carried out in parallel with system definition, and system realization processes, and it involved all activities and products resulting during the development as shown in Table 2.

Table 2: System Tests Results

Requirement	Description	Test Score
Power on LED	When the system was switched on, the LED was observed	Pass
Connected Sensors	Both voltage and current sensors were observed after supplying different voltages and currents	Pass
OLED	Power on and off was tested and UPS was switched on and off and the OLED was observed	Pass
Servo Motor	Different degrees were tested and the servo motor's reactions were observed	Pass
LoRa	The connection between the mains and the hub systems was tested and observed	Pass
GSM	Different SIM cards were used and the results observed	Pass

(i) Unit Validation

This is where each developed unit of the system was tested and observed individually before being integrated with other system units as shown in Fig. 24 and 25.

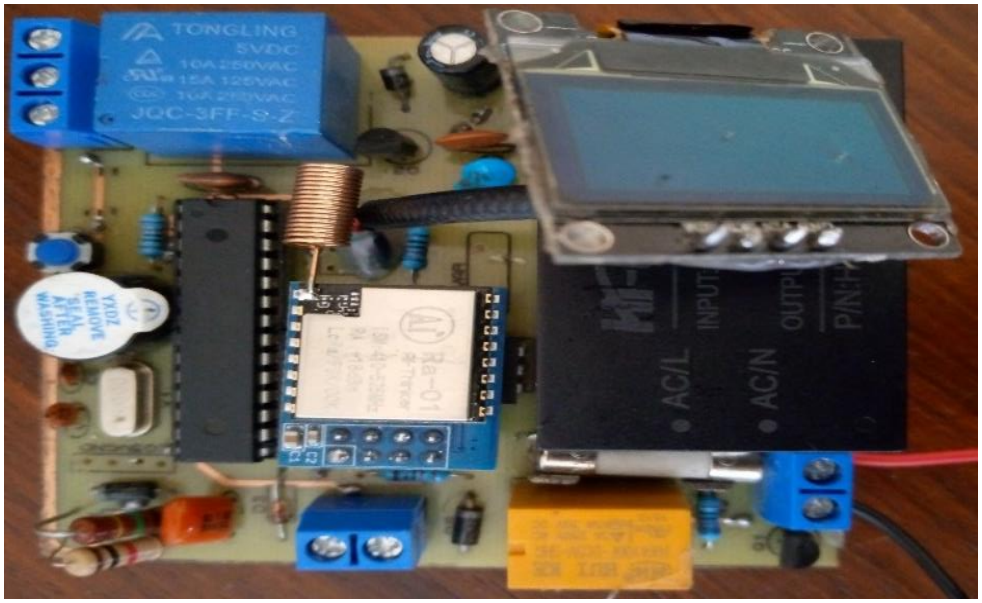

Figure 24: The Main System not Powered on

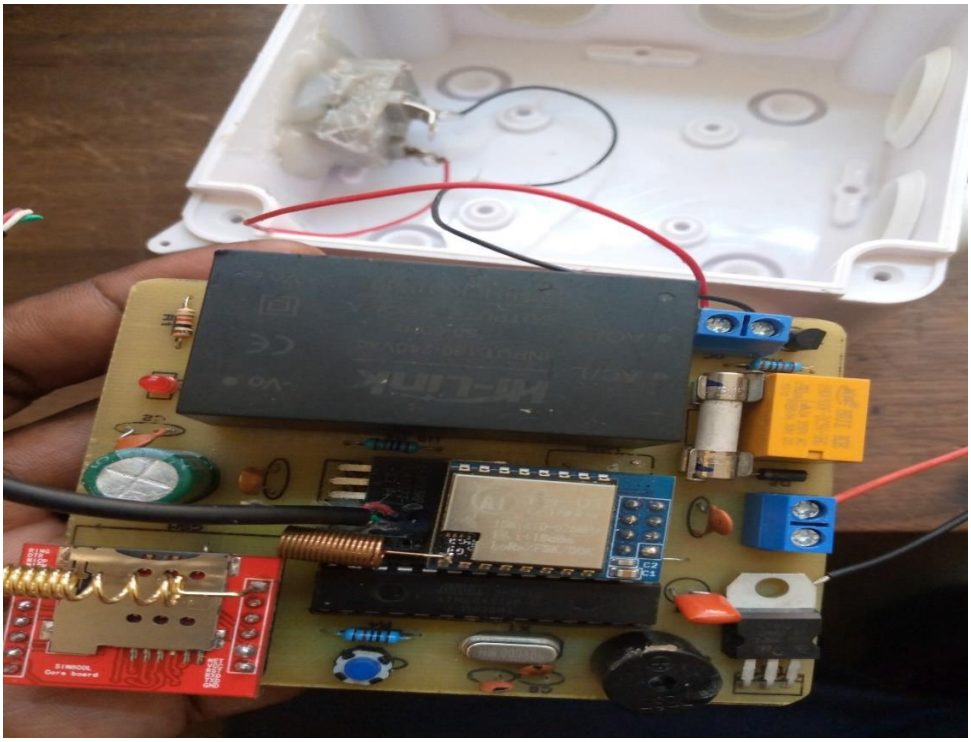

Figure 25: The Hub with both LoRa and GSM Modules Installed

(ii) Integration Validation

The system integration and validation stage deals with the unification and testing of many subsystems. It also involves the verification of the interaction between the modules of software and the hardware of each system. Several advantages are incorporated with the system

integration and validation. Some of those advantages are early defect detection, and early acceptability feedback of an individual module. Figure 26, 27, 28, 29, 30, 31 and 32 show the stages of integration. When the system is fully integrated with the UPS and the load, it shares power from the mains with the UPS, output power from the UPS is directed again to the system and the output power from the system goes to the load as shown in Fig. 30.

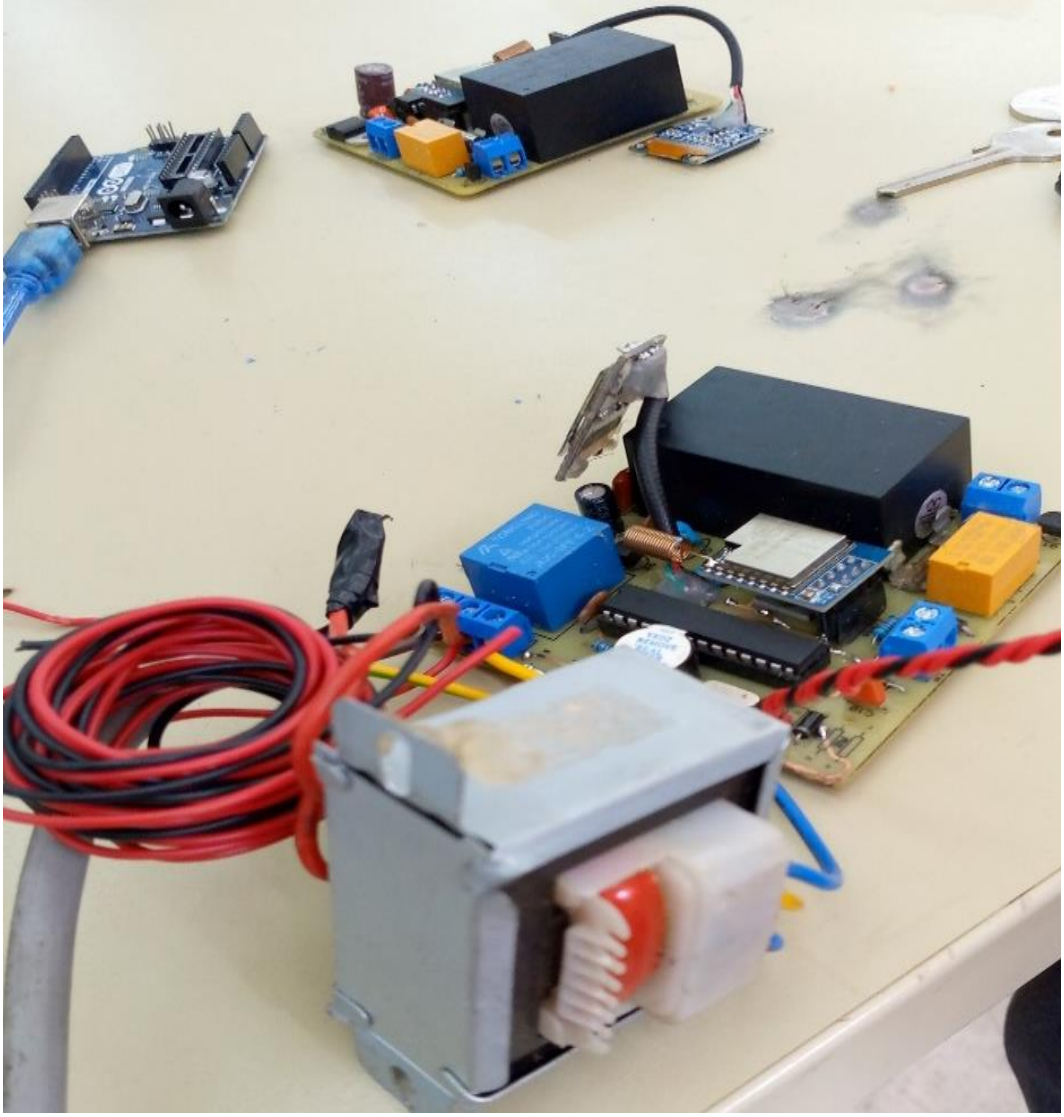

Figure 26: Transformer added the Main System

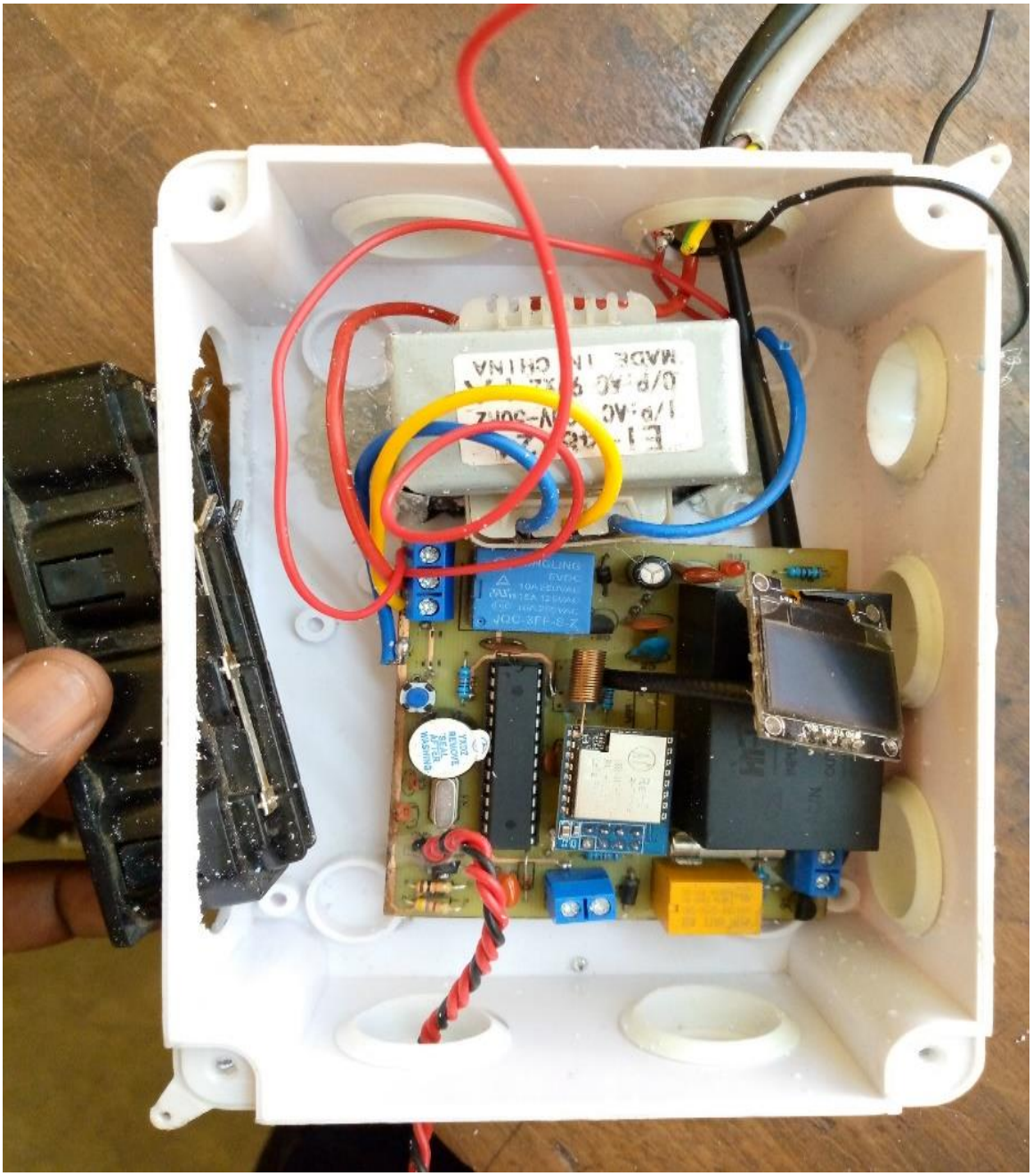

Figure 27: Adding Power Output Component to the Main System

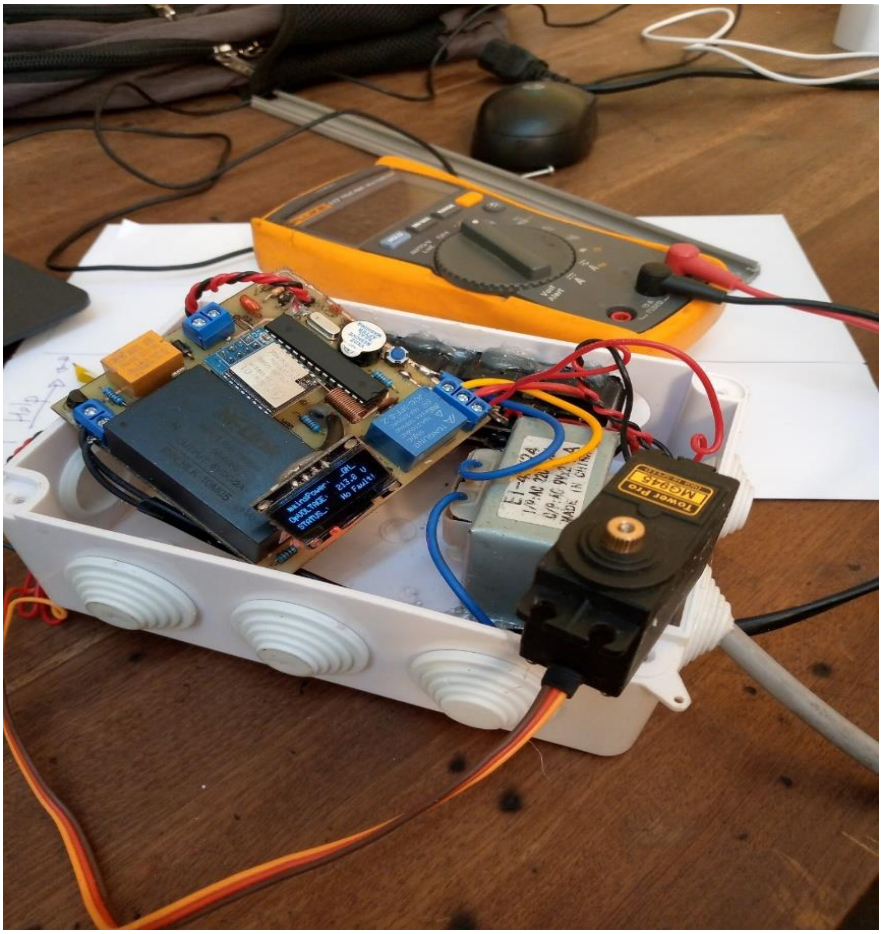

Figure 28: **Servo Motor Integrated to the Main System**

Figure 29: **System being Connected to UPS**

Figure 30: The Main System Mounted on the UPS

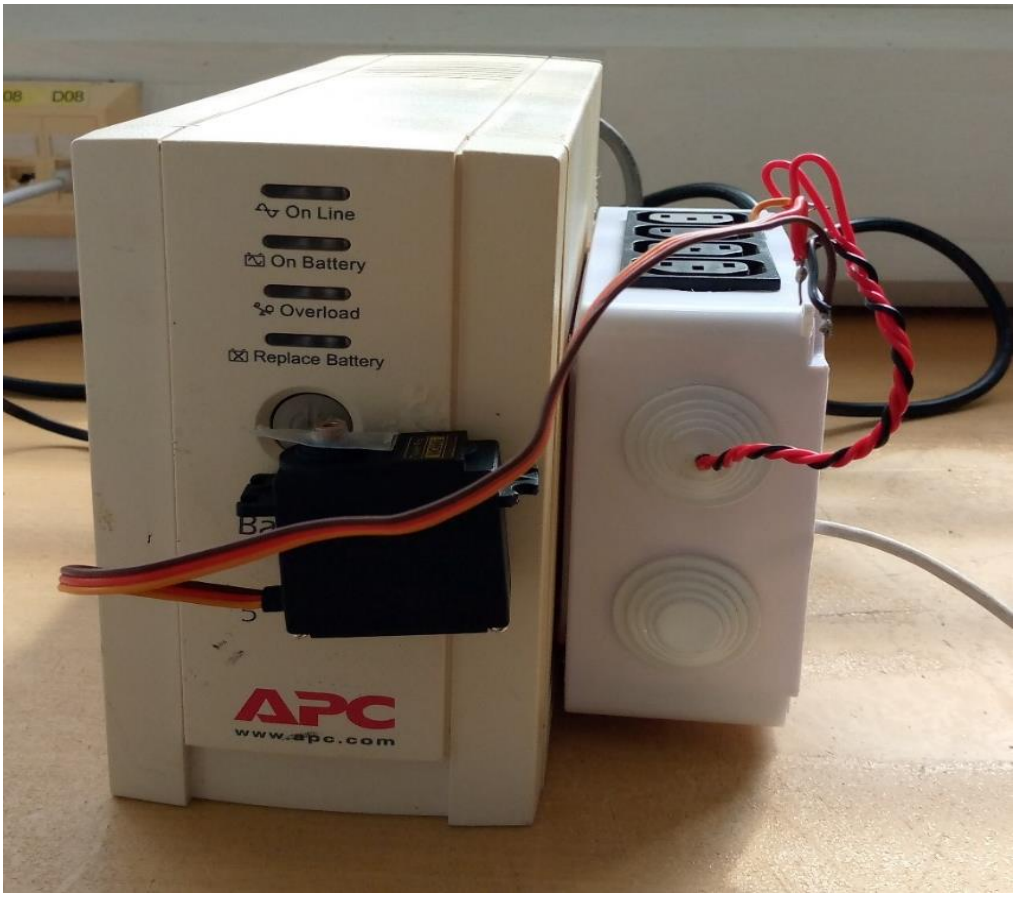

Figure 31: The Main System Mounted on the UPS with Servo Motor

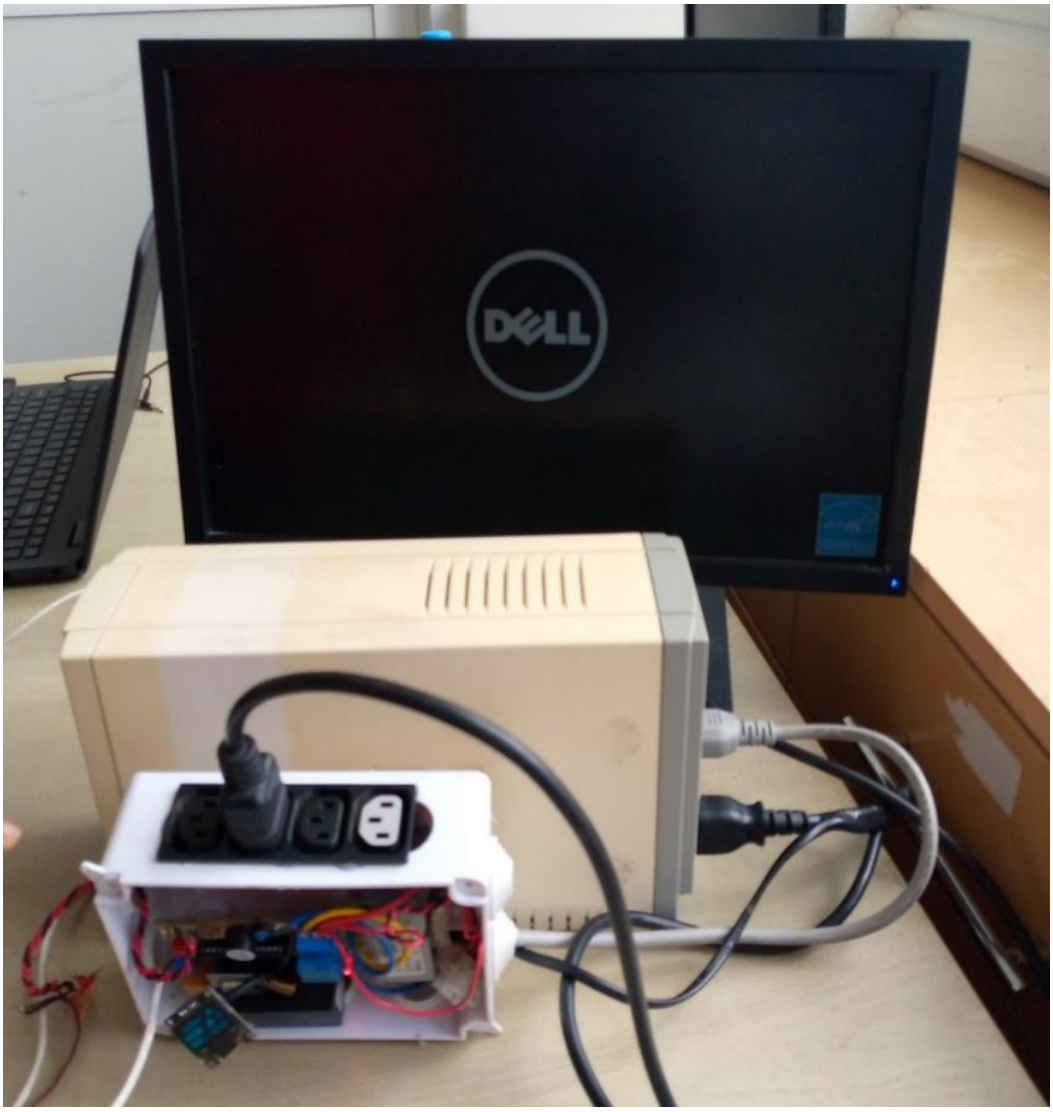

Figure 32: Main System Connected to the UPS and the load During Testing

(iii) Complete System Validation

The system was validated through a series of activities taken to check the compliance of the whole system against its indented functionality. Therefore, system validation provided a pathway for final error detection and correction. This stage is also known as a final validation, in which a complete integration validation process was applied to the system, and it was finally proven that the system is performing as planned.

The Main System Integration and Validation

The main AUPSBP was mounted on the UPS and was able to power up the desktop computer as shown in the Fig. 31. The system was placed between the UPS and the loads. It shares the same power cable which comes from the mains, with the UPS for easy monitoring of the supply of power from the mains to the UPS. The power output from the UPS passes through the system to measure the voltage coming from the UPS battery. When tested, the system was able to measure and display the status of both the UPS battery and

power from the mains, the voltage from the UPS battery, and the current leaving the UPS to the load on an OLED. The main system was connected to its designed hub through LoRa wireless technology. When the system detected a power blackout, the system switched from AC to DC 5 volt from the backup 9 volts battery using a voltage converter. It beeped, showed power status on the OLED display, sent signal to the hub, and lastly switched off the UPS based on specified 2 minutes. Moreover, when power from the mains was switched off, as the system was counting down to switch off the UPS, the UPS was deliberately switched off before the specified time for switching off elapsed. The system beeped and sent a signal to the hub.

The APC UPS used during the testing was able to run for 10 minutes without a load and power from the mains. After 10 minutes, the battery voltage was flat and the UPS went off. Using the same UPS, the second test was run with the load which was a desktop. This time the UPS only ran for 5 minutes and its battery ran flat and the UPS went off. When more loads were added, UPS' ability to run on its battery reduces. Therefore, it was concluded that UPS' ability to run without getting power supply from the mains depends on the battery's strength and the number of loads connected to it. Figure 33, 34 and 35 indicate the displays from the main system during system testing under different situations. Figure 38 shows how the system was connected during the testing.

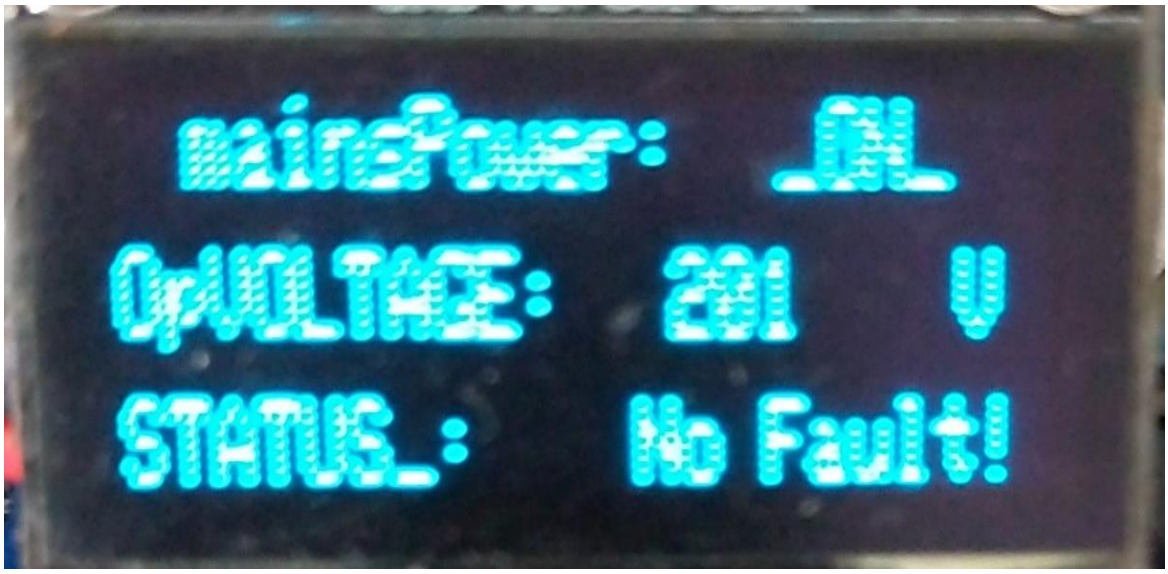

Figure 33: The Main System with UPS being switched on with a Load

Figure 34: When the Power from the Mains goes off while Load is off

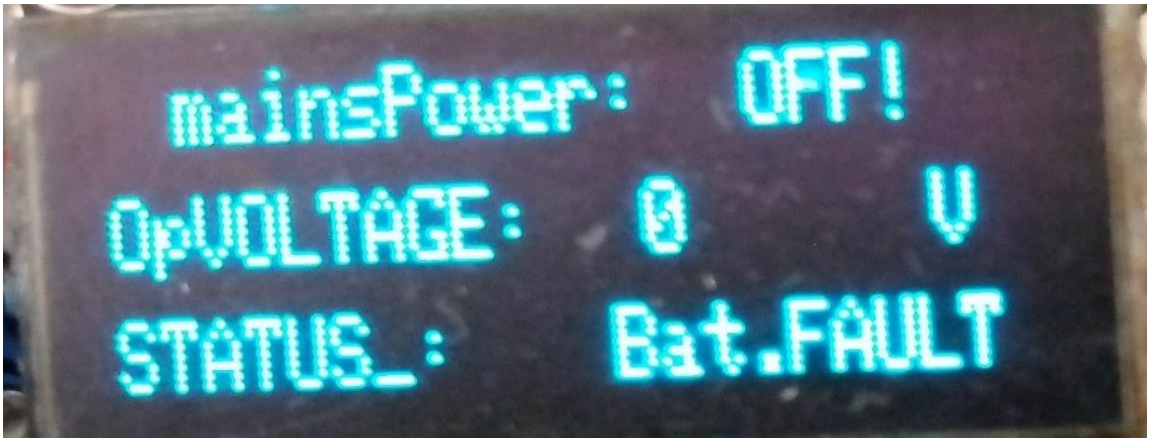

Figure 35: When the UPS goes off while there is no Power from the Mains

The System Hub Integration and Validation

The hub was connected to the main system through LoRa. When the main system sent signal to the hub, the hub beeped and it sent SMS through GSM to the subscribed mobile phone number indicating the battery issues identified by the main system. When the power from the mains was switched off, the hub received a signal from the main system, it beeped and sent a message indicating the status of the power from the mains as shown in Fig. 34. But when the UPS was switched off, the main system sent a different signal and it reported the battery status as fault (Fig. 35). Figure 36 and 37 are showing the messages sent by the system as the results of the testing.

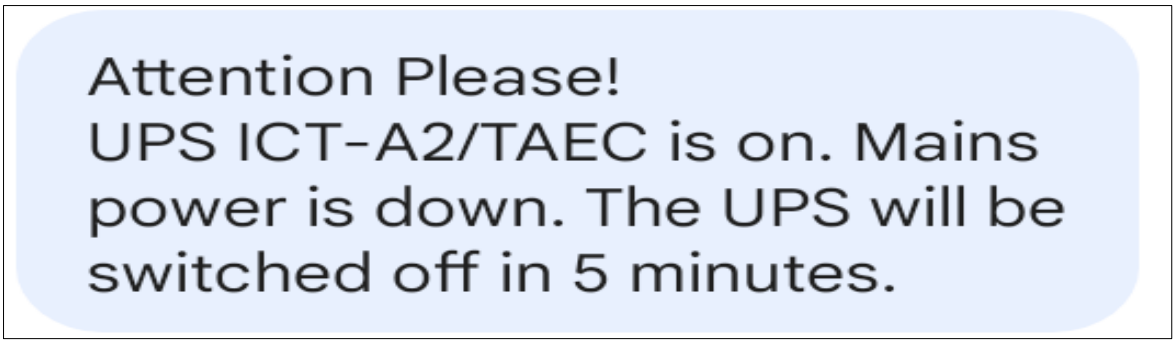

Figure 36: When Power from the Mains which supplying UPS was switched off

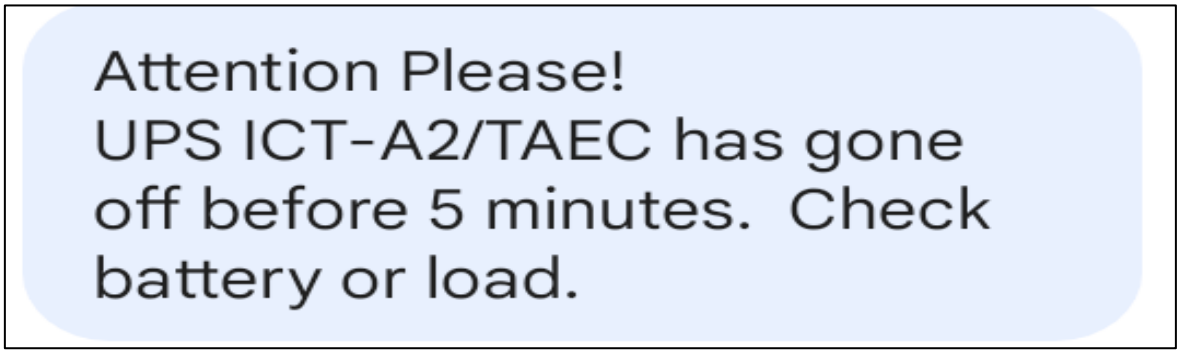

Figure 37: When UPS was switched off manually before the System's set Time

The complete testing of the AUPSBP system with UPS, a load, the hub, and the mobile phone is shown in Fig. 38.

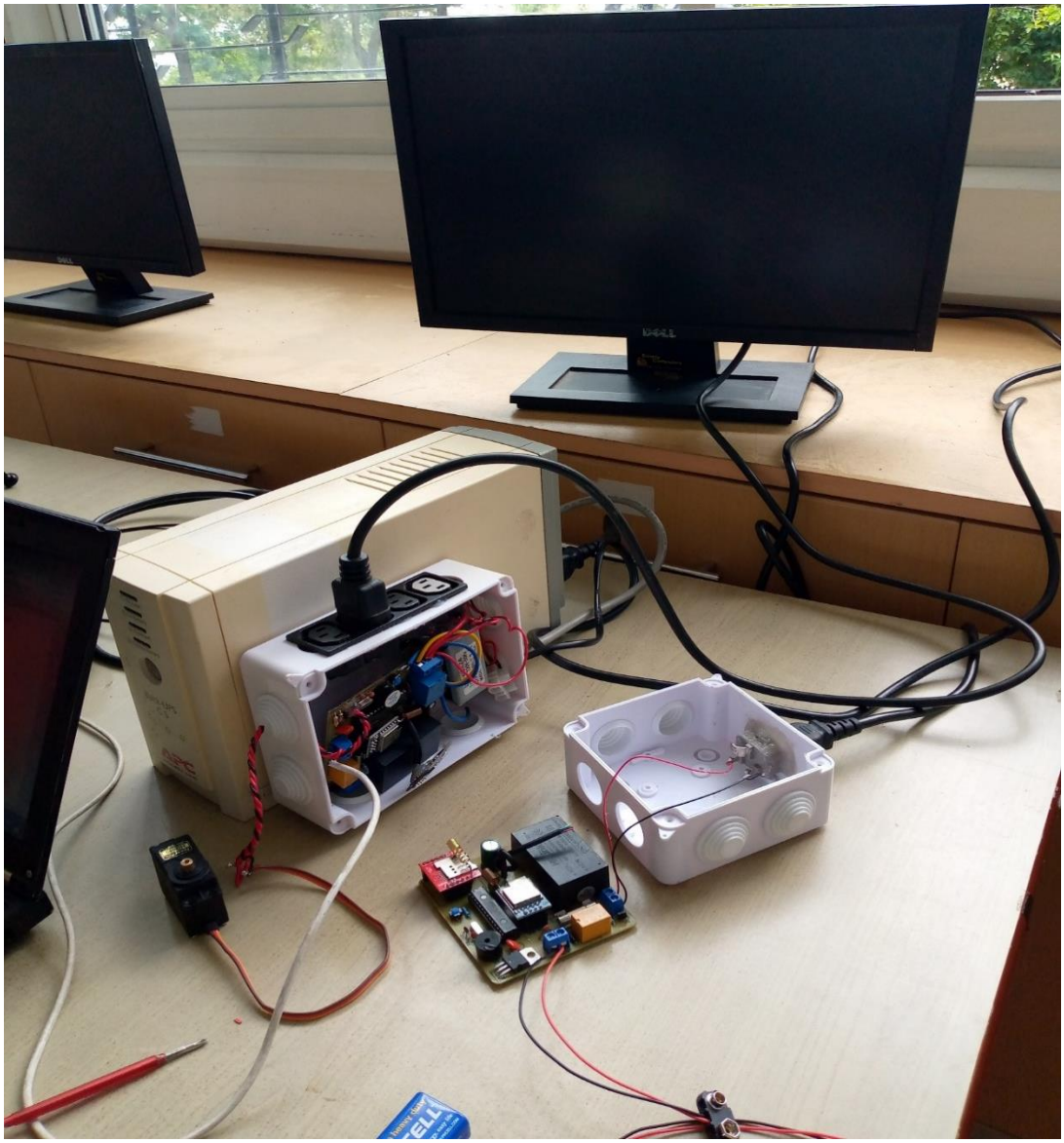

Figure 38: The complete testing of the AUPSBP System

4.2 Discussion

The discussion section is where the findings of the project have been interpreted and clearly explained for the better understanding of the project report and its significance. The proposed multifunctioning Automated Uninterruptible Power Supply Battery Protector was designed and developed to protect UPS battery from getting completely drained during power blackout. The system was successfully developed and when tested, it was able to monitor the flow of voltage from the mains to the UPS, reported both power cut from the mains and battery failure to the hub through LoRa wireless technology. The hub forwarded the received message from the main system to the subscribed phone number in form of SMS through GSM for an action as shown in Fig. 35 and 36. The system was able to monitor the flow of voltage from the UPS to the load. When the voltage from the UPS was below 100Vac, the system alerted the concerned personnel and shut the UPS down. The system provided information through LEDs, buzzer, OLED and SMS on power status, the voltage, and the battery status and lastly switched off the UPS to avoid total battery drainage. All the mentioned functions are designed to protect a UPS battery so that its ability to store electrical energy as a backup power supply can be retained to reach its designed lifespan.

The AUPSBP system is a standalone embedded system developed to support current UPS systems as an accessory to provide both protection and timely information for maintenance. Most of the time common human errors such as leaving UPS on to suffer when there is a power blackout, overloading of UPS and the practice of not regularly checking UPS battery's performance level which gradually lead to total UPS system breakdown as shown in Appendix 3. This system performed its designed functions independently of human direct intervention through software codes. With the support of the provided instructions in the form of codes, the system performed all its duties to the standard required. Due to the system's ability of being attached externally to a UPS, the AUPSBP embedded system can be used on different types of UPS from different manufactures in different sizes. Since the system's purpose is to preserve the UPS battery, it was designed to switch off a UPS before its battery goes flat. If a battery can run for 10 minutes without supply from the mains, the system will alert and switch the UPS off in 5 minutes to ensure that the battery is still having sufficient voltage.

During the testing, the system wrongly reported the UPS battery as a fault when power was switched on and off without switching on the UPS which is one of challenges which needs to be addressed.

CHAPTER FIVE

CONCLUSION AND RECOMMENDATIONS

5.1 Conclusion

In this project we developed Automated Uninterruptible Power Supply Batter Protector capable to protect UPS batteries from getting drained to zero level during blackouts when the UPS is left on. The system has sensors to monitor the UPS in real-time and switch it off when there is no power from the mains or when the voltage being supplied by the UPS battery is less than 100Vac. The developed system provides information on UPS issues to the concerned personnel through OLED and SMS. The research was also able to prove that the developed system is cost viable because designing, developing, and testing the proposed system were achieved at a low cost. Moreover, the developed system has proven that it is cost-effective for solving the identified UPS battery problems. It can reduce the cost of battery replacement, track UPS handling, and one system can be used on different new UPS with only a change of a few parameters.

The Automated Uninterruptible Power Supply Battery Protector system does not only provide a better solution for managing and controlling electrical energy in UPS battery system but also seeks to add to the body of knowledge that provision of one solution for solving many problems is important. When system engineers come up with a new system, the system should have an independent mechanism to protect itself and other related systems from getting damaged easily.

5.2 Recommendations

This system is recommended for use especially by TAEC because it will greatly help in solving identified UPS battery-related issues and ultimately preserve UPS battery lifespan. It will report on the status of a UPS both on the OLED and SMS. It is cheap to develop and maintain. The system can inform the lab technician or personnel on UPS battery issues before it is too late, help in identifying those who do not switch off their UPS when going home. Any UPS left on and when the power goes off, the system will report immediately. Furthermore, it is a system that can be used on all types of UPS with switch and push buttons from different manufacturers and of different sizes. When a UPS is not able to provide enough voltages, the system will report the battery status of that particular UPS to the concerned personnel, therefore, this will provide an easy and effective means for monitoring UPS status remotely in real-time. The system can be installed to function in operation sites such as households, factories, offices, colleges, schools, etc. In short, this

system can be installed at every place which is depending upon stored electrical backup energy for its operation after the cutoff of power supply from the mains. Therefore, there is a very vast area for deploying the developed system in electrical power backups.

After the development of the block diagram and circuitry for the prototype, experienced experts at the institution were asked for their expert opinions on the design. Their opinions have helped in identifying what should be added to the prototype to make it perform better and what other components with the least importance should be removed from the prototype to reduce size and cost. Some of the comments received at this stage are carried forward for future work. Nevertheless, due to limited resources such as time and appropriate tools, the system still needs more to be improved. This research can be improved in areas such as the system should have an ability to switch itself automatically off to preserve its power after it switches off a UPS, it should incorporate a mobile application which will provide both on and off switching remotely.

REFERENCES

Bharti, P., Singh, A., & Singh, P. (2021). *Smart-UPS with a Priority-Based Load Management System Smart-UPS with a Priority-based Load Management System*. https://doi.org/10.1088/1742-6596/2007/1/012006

Carle, R. H. (1993). *UPS Applications: A MiII Perspective*. https://www.google.com

Cun, J. P., Fiorina, J. N., Fraisse, M., & Mabboux, H. (1996). Experience of a UPS Company in Advanced Battery Monitoring. *International Telecommunications Energy Conference*. https://doi.org/10.1109/intlec.1996.573404

Guerrero, J. M., De Vicuña, L. G., & Uceda, J. (2007). Uninterruptible power supply systems provide protection. *Industrial Electronics Magazine*, 1(1), 28–38.

Hsiao, T. C., Chen, T. L., Liu, C. H., Lee, C. M., Yu, H. C., & Chen, T. S. (2014). Quality control of lead-acid battery according to its condition test for UPS supplier and manufacturers. *Mathematical Problems in Engineering, 2014*, 1-10. https://doi.org/10.1155/2014/910820

Joshi, Y., & Kumar, P. (Eds.). (2012). *Energy Efficient Thermal Management of Data Centers.* Springer Science & Business Media. https://www.google.com

Kutluay, K., Cadirci, Y., Ozkazanc, Y. S., & Cadirci, I. (2005). A new online state-of-charge estimation and monitoring system for sealed lead-acid batteries in telecommunication power supplies. *Transactions on Industrial Electronics*, 52(5), 1315-1327.

Lahyani, A., Venet, P., Guermazi, A., & Troudi, A. (2013). Battery/Supercapacitors Combination in Uninterruptible Power Supply (UPS). *Transactions on Power Electronics*, *28*(4), 1509–1522. https://doi.org/10.1109/TPEL.2012.2210736

Mike, B. (2020). *Five Leading Causes of UPS Battery Failure - QPS*. https://www.qpsolutions.net

Palamar, A. (2020). *Intelligent Control and Monitoring Module for Uninterruptible Power Supply System*. https://www.google.com

Racine, M. S., Parham, J. D., & Rashid, M. H. (2005). *An overview of Uninterruptible Power Supplies. Proceedings of the 37th Annual North American Power Symposium, 2005*. https://www.google.com

Strods, G., & Pecka, A. (2018). Uninterrupted power supply battery life cycle system development. *Engineering for Rural Development*, *17*, 1521–1525.

Weber, L. G., & Nasiri, A. (2016). Uninterruptible power supplies. *Power Electronic Converters and Systems: Frontiers and Applications*, 2018, 557–575.

APPENDICES

Appendix 1: Codes for AUPSBP Operation

```
#include <Servo.h>
#include <Adafruit_GFX.h>        //OLED libraries
#include <Adafruit_SSD1306.h>
#include <Wire.h>
#include <SPI.h>
#include <LoRa.h>

#define voltageSensor A2
#define powerLine 8
#define servoMotor 6
#define Alarm 4
#define Relay A0
#define SCREEN_WIDTH 128 // OLED display width, in pixels
#define SCREEN_HEIGHT 32 // OLED display height, in pixels
#define OLED_RESET    -1 // Reset pin # (or -1 if sharing Arduino reset pin)
#define REPORTING_PERIOD_MS  30000
#define dataLog 5000
#define ratioV 1
#define voltLog 3000

Adafruit_SSD1306 display(SCREEN_WIDTH, SCREEN_HEIGHT, &Wire,
OLED_RESET); //Declaring the display name (display)
Servo mechSwitch;

bool mains,Fault=false,timeTrig=true;

int voltageMeasure,currentMeasure,Total=0,Voltage,v2;
char i=0,motorRotation=0;
unsigned long previousMillis1=0,previousMillis2=0,currentMillis,previousMillis3=0;

void setup() {
  Wire.begin();
  display.begin(SSD1306_SWITCHCAPVCC, 0x3C); //Start the OLED display
```

```
  display.display();
  delay(2000);
  display.clearDisplay();
  pinMode(powerLine,INPUT);
  pinMode(voltageSensor,INPUT);
  pinMode(Alarm,OUTPUT); pinMode(Relay,OUTPUT);
  digitalWrite(Alarm,LOW);
  delay(100);
  LoRa.begin(433E6);
  mechSwitch.attach(servoMotor);
  display.clearDisplay();
  mechSwitch.write(0);
}

void loop() {
  currentMillis = millis();
  mains=digitalRead(powerLine);
//Voltage measurement
  if(currentMillis - previousMillis3 > voltLog){
    previousMillis3 = currentMillis;
    for(i=0;i<100;i++){
      Total+=analogRead(voltageSensor)*0.845;
      delay(1);
    }
    voltageMeasure=Total/100*ratioV;
    voltageMeasure=map(voltageMeasure,0,240,0,228);
    Total=0;
  }
//Load controll
  if(mains==false){
    if(timeTrig)
      previousMillis1 = currentMillis;
    timeTrig=false;
```

```
    if(currentMillis - previousMillis1 > REPORTING_PERIOD_MS){
      if(voltageMeasure<200){
        Fault=true;
        digitalWrite(Relay,HIGH);
        if(motorRotation!=1){
          mechSwitch.write(90);
          digitalWrite(Alarm,HIGH);
          delay(2000);
          mechSwitch.write(0);
        }digitalWrite(Alarm,LOW);
      }
    }else{
      digitalWrite(Relay,LOW);
    }
  }
//Dispaly
  display.clearDisplay();
  display.setTextColor(WHITE);
  display.setTextSize(1);
  display.setCursor(10,0);
  display.println("MainsPower: ");
  display.setCursor(90,0);
  if(mains)
    display.println("_ON_");
  else
    display.println("OFF!");

  display.setCursor(0,12);
  display.println("OpVoltage: ");
  display.setCursor(75,12);
  display.println(String(voltageMeasure));
  display.setCursor(115,12);
  display.print("V");
```

```
  display.setCursor(0,24);
  display.println("STATUS_: ");
  display.setCursor(70,24);
  if(Fault)
    display.println("Bat.Fault");
  else
    display.println("No Fault!");
  display.display();

  if(currentMillis - previousMillis2 > dataLog){
    previousMillis2 = currentMillis;
    LoRa.beginPacket();
    if(Fault)
      LoRa.print('#');
    else
      LoRa.print('@');
    LoRa.endPacket();
  }
}
```

Appendix 2: Codes for the Hub

```
#include <Adafruit_GFX.h>        //OLED libraries
#include <Adafruit_SSD1306.h>
#include <Wire.h>
#include <SPI.h>
#include <LoRa.h>

#define powerLine A2
#define Alarm 6
#define SCREEN_WIDTH 128 // OLED display width, in pixels
#define SCREEN_HEIGHT 32 // OLED display height, in pixels
#define OLED_RESET    -1 // Reset pin # (or -1 if sharing Arduino reset pin)

Adafruit_SSD1306 display(SCREEN_WIDTH, SCREEN_HEIGHT, &Wire,
OLED_RESET); //Declaring the display name (display)

bool mains,Fault1=false,Fault2=false,sms1=true,sms2=true,sms3=true,beepSound=true;

void setup() {
  Wire.begin();
  display.begin(SSD1306_SWITCHCAPVCC, 0x3C); //Start the OLED display
  display.display();
  display.clearDisplay();
  pinMode(powerLine,INPUT);
  pinMode(Alarm,OUTPUT);
  digitalWrite(Alarm,LOW);
  digitalWrite(Alarm,HIGH);
  delay(100);
  Serial.begin(9600);
  LoRa.begin(433E6);
  delay(2000);
  display.clearDisplay();
  delay(100);
  digitalWrite(Alarm,LOW);
```

```
}

void loop() {
  mains=digitalRead(powerLine);
//Dispaly
  display.clearDisplay();
  display.setTextColor(WHITE);

  display.setCursor(10,0);
  display.println("MainsPower: ");
  display.setCursor(90,0);
  if(mains)
    display.println("_ON_");
  else
    display.println("OFF!");

  display.setCursor(0,12);
  display.println("UPS_1: ");
  display.setCursor(70,12);
  if(Fault1)
    display.println("Bat.Fault");
  else
    display.println("No Fault!");
  display.setCursor(0,24);
  display.println("UPS_2: ");
  display.setCursor(70,24);
  if(Fault2)
    display.println("Bat.Fault");
  else
    display.println("No Fault!");
  display.display();

//LORA data reception
```

```
  int packetSize = LoRa.parsePacket();
  if (packetSize) {
    while (LoRa.available()) {
      char incoming = (char)LoRa.read();
      if (incoming == '#')
        Fault1=true;
     else if(incoming == '@')
        Fault1=false;
     else if(incoming == '!')
        Fault2=true;
     else if(incoming == '$')
        Fault2=false;
    }
  }

//SMS and alarm
  if(Fault1){
    if(sms1)
      SendSms("Attention:UPS_1 Battery Fault");
    sms1=false;
  }else
    sms1=true;
  if(Fault2){
    if(sms2)
      SendSms("Attention:UPS_2 Battery Fault");
    sms2=false;
  }else
    sms2=true;
  if(mains==false){
    if(sms3)
      SendSms("Attention:Mains power down");
    sms3=false;
```

```
  }else
    sms3=true;
  if(Fault1||Fault2){
    if(beepSound){
      digitalWrite(Alarm,HIGH);
      delay(3000);
    }beepSound=false;
  }
  else
    digitalWrite(Alarm,LOW);//SMS and alarm
}

void SendSms(String message){
  Serial.println("AT+CMGF=1");    //To send SMS in Text Mode
  delay(200);
  Serial.println("AT+CMGS=\"+255622864603\"\r");
  delay(200);
  Serial.print("Attention Please!");
  Serial.println(message);
  delay(300);
  Serial.println((char)26);//the stopping character
  delay(500);
}//SMS
```

Appendix 3: Out of use UPS due to Batter Damage

Appendix 4: Unstructured Interview Questions Sample

1. Does the institution experience Uninterruptible power supply damage?
2. Which part of the uninterruptible power supply gets damaged frequently?
3. What are the causes of frequent damages to uninterruptible power supply in the institution?
4. Is repair of the ups easier than buying a new ups?
5. Is buying a new ups cheaper than repairing ups?
6. Is there anything that can be done by the institution to mitigate the damage?
7. If there is a plan to come up with a system to protect the identified ups part, will it be a good thing?

POSTER PRESENTATION